2019 Torpedo

10th letter in VIN: K

ILLUSTRATED PARTS BOOK

LIQUID COMBUSTION TECHNOLOGY

136CC STANDARD NON GEN
SUMMER ENGINE SERVICE KIT
PLMHK14400124PBPQSTUV3E2M
PLMHK14400124PBPQSTUVE2M
PLMHK14400124PBGNSTUVE2S

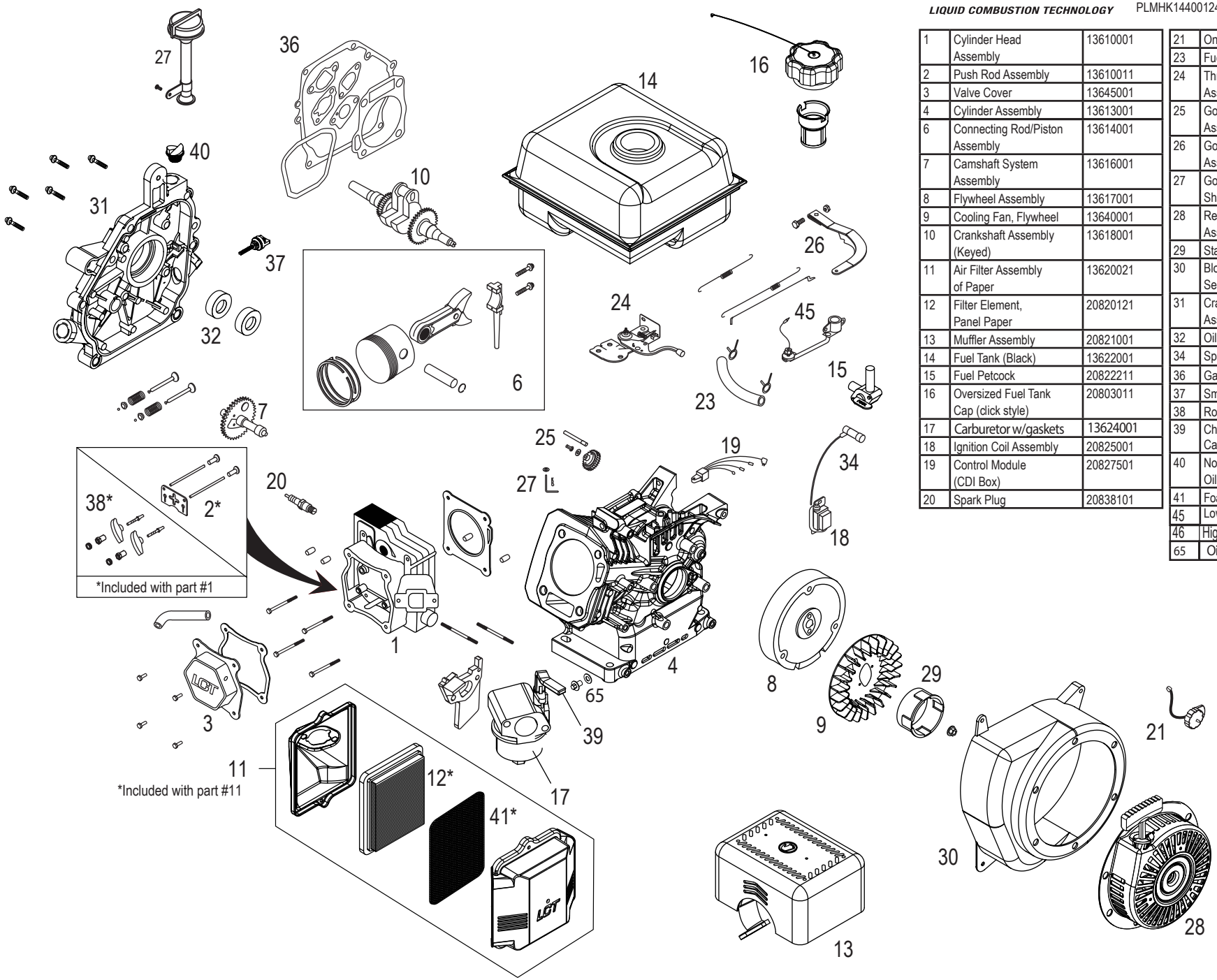

1	Cylinder Head Assembly	13610001
2	Push Rod Assembly	13610011
3	Valve Cover	13645001
4	Cylinder Assembly	13613001
6	Connecting Rod/Piston Assembly	13614001
7	Camshaft System Assembly	13616001
8	Flywheel Assembly	13617001
9	Cooling Fan, Flywheel	13640001
10	Crankshaft Assembly (Keyed)	13618001
11	Air Filter Assembly of Paper	13620021
12	Filter Element, Panel Paper	20820121
13	Muffler Assembly	20821001
14	Fuel Tank (Black)	13622001
15	Fuel Petcock	20822211
16	Oversized Fuel Tank Cap (click style)	20803011
17	Carburetor w/gaskets	13624001
18	Ignition Coil Assembly	20825001
19	Control Module (CDI Box)	20827501
20	Spark Plug	20838101

21	On/Off Switch	20826001
23	Fuel Hose Kit	20860001
24	Throttle Control Assembly	13628001
25	Governor Gear Assembly	20829001
26	Governor Link Assembly	13630001
27	Governor Arm Shaft Assembly	13631001
28	Recoil Starter Assembly	20832002
29	Starter Cup	13616011
30	Blower Housing Service Kit	13634001
31	Crankcase Cover Assembly	13636001
32	Oil Seal Kit	13639001
34	Spark Plug Boot	20838001
36	Gasket Kit	13643001
37	Small Black Dipstick	20837111
38	Rocker Arm Assy	13611001
39	Choke Lever, Carburetor	20821201
40	Non-Removable Oil Plug	20837051
41	Foam Pre-Filter	20890011
45	Low Oil Sensor	20827001
46	High Oil-Fill Tube	3637001
65	Oil Drain Plug/Washer	20899111

FRAME PARTS

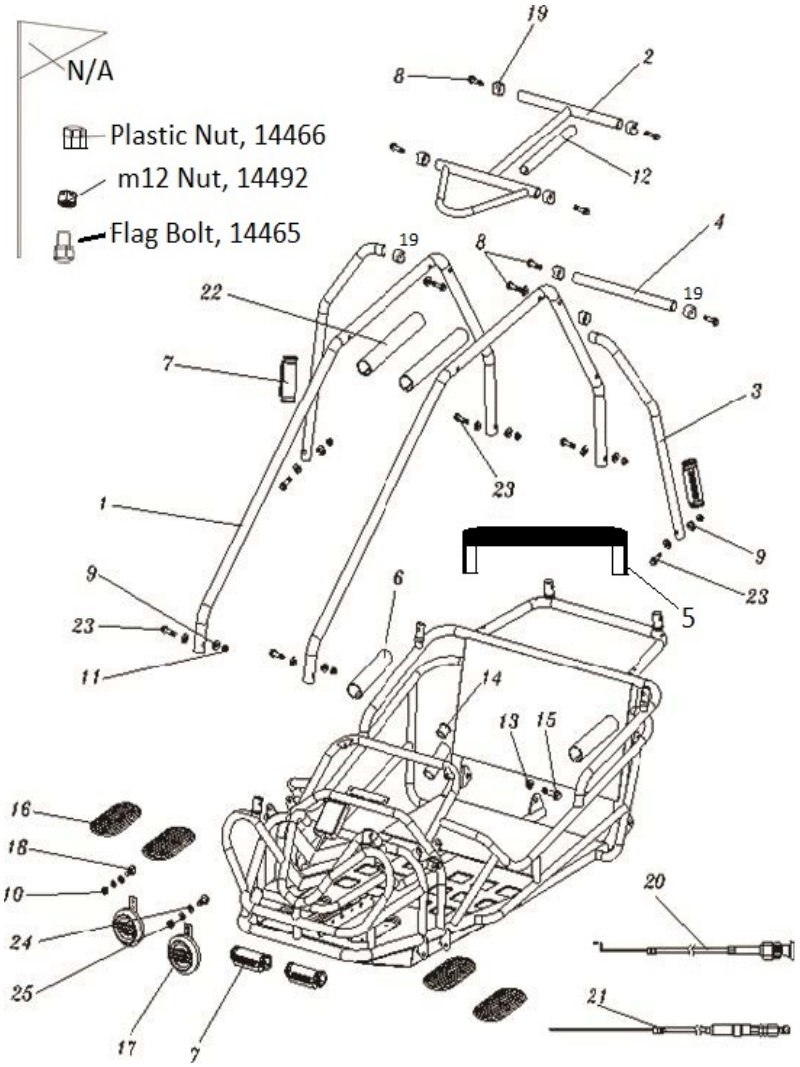

Ref Num	Part Num	Description	Qty
1	8.070.045	CUSTOM BAR CAGE.Black	2
2	6.000.194	CUSTOM CROSS BAR TOP.FR.Black	1
3	8.070.046	CUSTOMJ-BAR.L.R.SIDE Black	2
4	8.080.041	CUSTOM CROSS BAR.RR.Black	1
5	21-0634-00	HEAD/BACK SUPPORT BAR Black	1
6	6.000.189	FOAM PADDING--22	2
7	7.020.048	RUBBER PROTECTOR	4
8	9.108.045	BOLT m8x1.25x45	14
9	7.010.049	R-WASHER	20
10	9.220.008	LOCK NUT M8	2
11	9.220.008	LOCKING FLANGE NUT M8	6
12	6.000.191	FOAM PADDING	1
13	9.220.010	LOCKING FLANGE NUT.M10	1
14	7.010.006	STEERING SHAFT BUSH	1
15	9.110.020	BOLT m10x1.25x20	1
16	7.020.045	RUBBER FOOT PLATE	4
17	6.000.135	HORN	2
18	9.108.014	FLANGE BOLT m8x1.25x14	2
19	7.010.045	CUSTOM BAR CAGE CAP	8
20	6.030.132	THROTTL CABLE COMP.	1
21	6.000.133	BRAKE CABLE COMP.	1
22	6.000.190	FOAM PADDING--30	2
23	9.108.050	BOLT m8x1.25x50	6
24	9.300.008	FLAT WASHER M8	2
25	9.400.008	LOCK WASHER M8	2

STEERING COMPONENTS

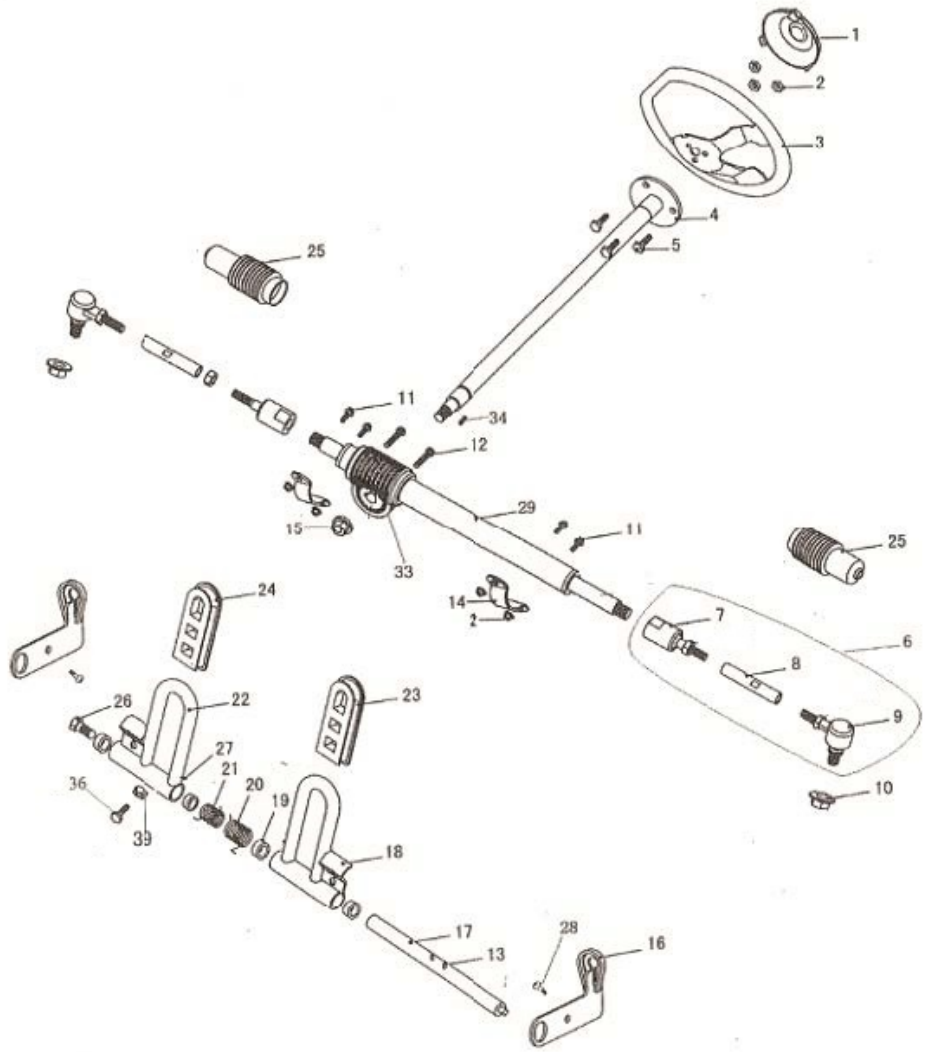

Ref Num	Part Num	Description	Qty
1	7.010.056	STEERING WHEEL COVER	1
2	9.220.006	LOCKING NYLON NUT M6	7
3	7.020.057	STEERING WHEEL	1
4	2.000.056	STEERING SHAFT	1
5	9.106.016	BOLT,M6X16	3
6	14-1000-00	TIE ROD ASSY	2
7	6.000.180	STEERING BALL JOINT	2
8	8.010.135	TIE ROD	2
9	6.000.181	ROD END	2
10	9.220.008	LOCK NUT M8	2
11	9.106.020	FLANGE BOLT,M6X20	4
12	9.100.512	BOLT,M5X12	2
13	9.500.008	ROLL PIN Æ3X20	2
14	8.020.130	STEERING GEAR BRACKET	2
15	9.220.012	LOCKING NUT M12	1
16	8.020.144	PEDAL BRACKET	2
17	8.010.103	PEDAL BOLT	1
18	21-0633-01	BRAKE PEDAL COMP	1
19	7.010.003	PEDAL BUSH	4
20	8.040.011	BRAKE PEDAL RETURN SPRING,R	1

Ref Num	Part Num	Description	Qty
21	8.040.010	THROTTLE PEDAL RETURN SPRING,L	1
22	21-0610-01	THROTTLE PEDAL COMP	1
23	7.020.043	BRAKE PEDAL PAD	1
24	7.020.044	THROTTLE PEDAL PAD	1
25	7.020.059	STEERING BALL JOINT DUST COVER	2
26	9.129.816	ALLEN HEAD BOLT M8X1.25X16	1
27	9.500.007	ROLL PIN M3X16	2
28	9.100.512	BOLT,M5X12	2
29	4.000.024	STEERING GEAR	1
30			
31			
32			
33	4.010.001	PLASTIC STEERING GEAR HOLDER	1
34	14-1002-00	KEY 4X4X12	1
35			
36	003-08033-00	Throttle Pedal Stop Bolt	1
37			
38			
39	9.200.008	NUT M8	1

FRONT SUSPENSION

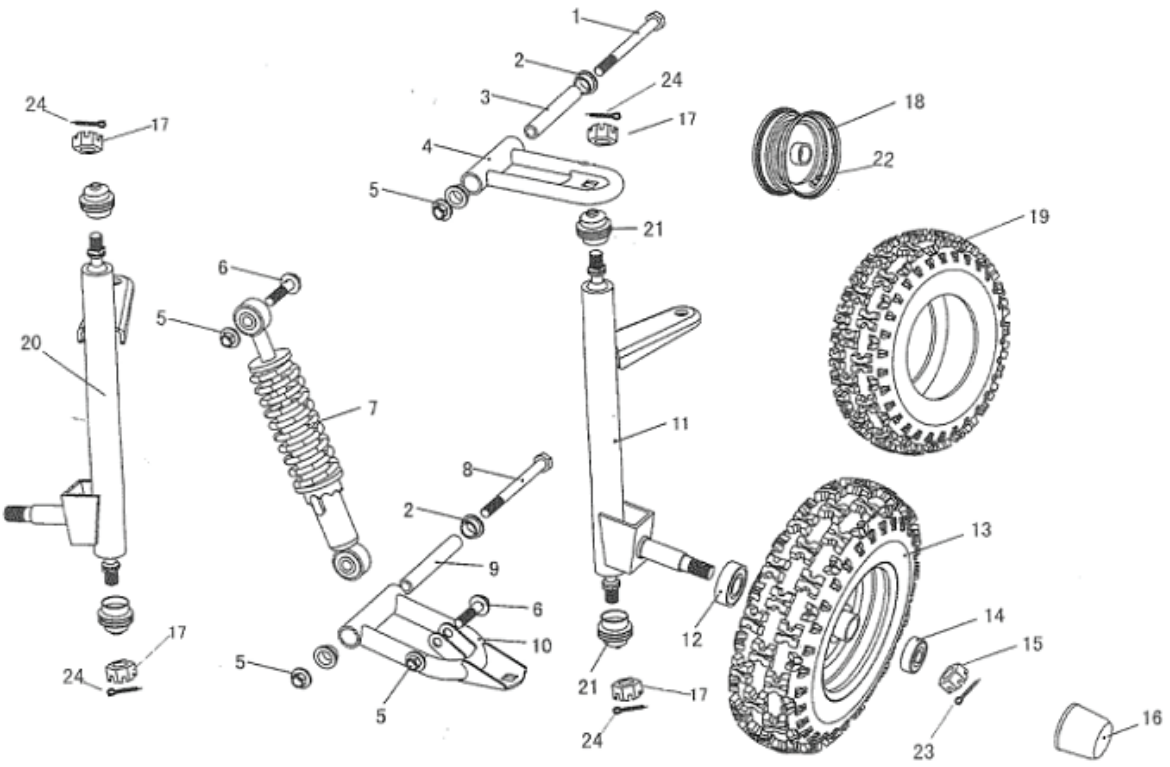

Ref Num	Part Num	Description	Qty
1	9.108.095	FLANGE BOLT M8X1.25X95	2
2	7.010.003	UPPER SUSPENSION ARM BUSH	8
3	8.010.104	UPPER SUSPENSION ARM COLLAR	2
4	4.000.020	UPPER SUSPENSION ARM	2
5	9.220.008	LOCKING FLANGE NUT M8	8
6	9.108.035	FLANGE BOLT M8X1.25X35	4
7	6.000.172	CUSHION ASS¢Y.FR	2
8	9.108.105	FLANGE BOLT M8X1.25X105	2
9	8.010.015	LOWER SUSPENSION ARM COLLAR	2
10	4.000.021	LOWER SUSPENSION ARM ASSY	2
11	2.000.031	SPINDLE AND STRUT SUPPORT, RIGHT	1
12	9.030.010	BEARING 6202	2
13	6.100.169	FRONT TIRE/WHEEL ASM. (black wheel)	2
14	9.030.009	BEARING 6201	2
15	9.800.012	CASTLE NUT M12	2
16	7.020.039	HUB COVER.FR	2
17	9.800.010	CASTLE NUT M10	4
18	6.000.182-BK	FRONT WHEEL (black)	2
19	001-133506-00	TIRE.FR 13x4.10-6	2
20	2.000.032	SPINDLE AND STRUT SUPPORT, LEFT	1
21	7.020.061	BALL HEAD DUST SEAL	4
22	7.190.018	AIR VALVE	2
23	9.500.002	COTTER PIN 2.5X30	2
24	9.500.220	COTTER PIN 2X25	4

REAR SUSPENSION

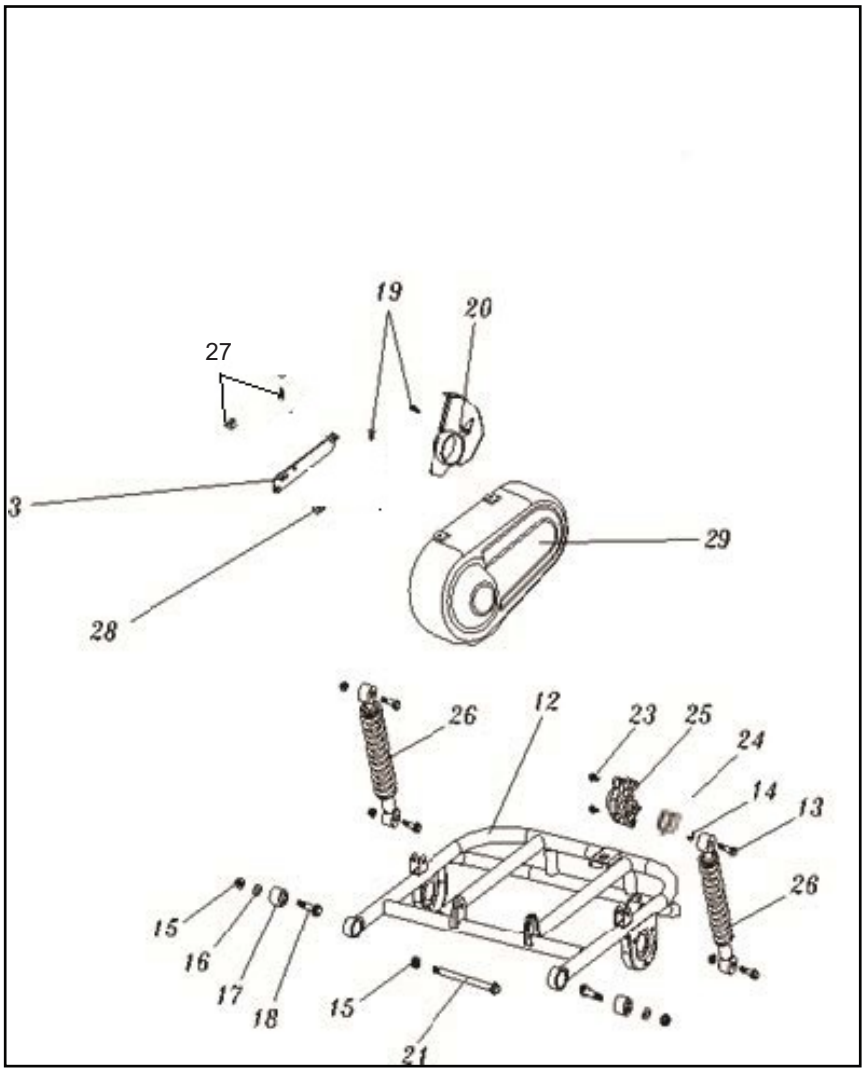

Ref Num	Part Num	Description	Qty
1			
2			
3	21-0627-00	CHAIN GUARD BRACKET	1
4			
5			
6			
7			
8			
9			
10			
11			
12	14-0602-00	REAR SWING ARM	1
13	9.108.035	FLANGE BOLT M8X1.25X35	4
14	9.220.008	LOCKING FLANGE NUT M8	4
15	9.220.010	LOCKING FLANGE NUT M10	3
16	003-10040-00	SEAT BELT COLLAR	2
17	7.020.056	REAR SWING ARM BUSH	2
18	9.110.050	FLANGE BOLT M10X1.25X50	2
19	003-050030-00	SCREW ST4.8X15	3
20	14-0207-00	CHAIN GUARD SECONDARY	1
21	9.110.180	FLANGE BOLT M10X1.25X180	1
22			
23	9.106.016	FLANGE BOLT M6X16	2
24	7.020.060	BRAKE PAD SET.RR	1
25	21-1402-00	CALIPER ASSY.RR	1
26	6.000.173	CUSHION ASS'Y.RR	2
27	9.106.016	FLANGE BOLT M6X16	2
28	9.108.016	FLANGE BOLT M8X16	2
29	8.011.021	CHAIN GUARD	1
30			1

REAR AXLE HOUSING

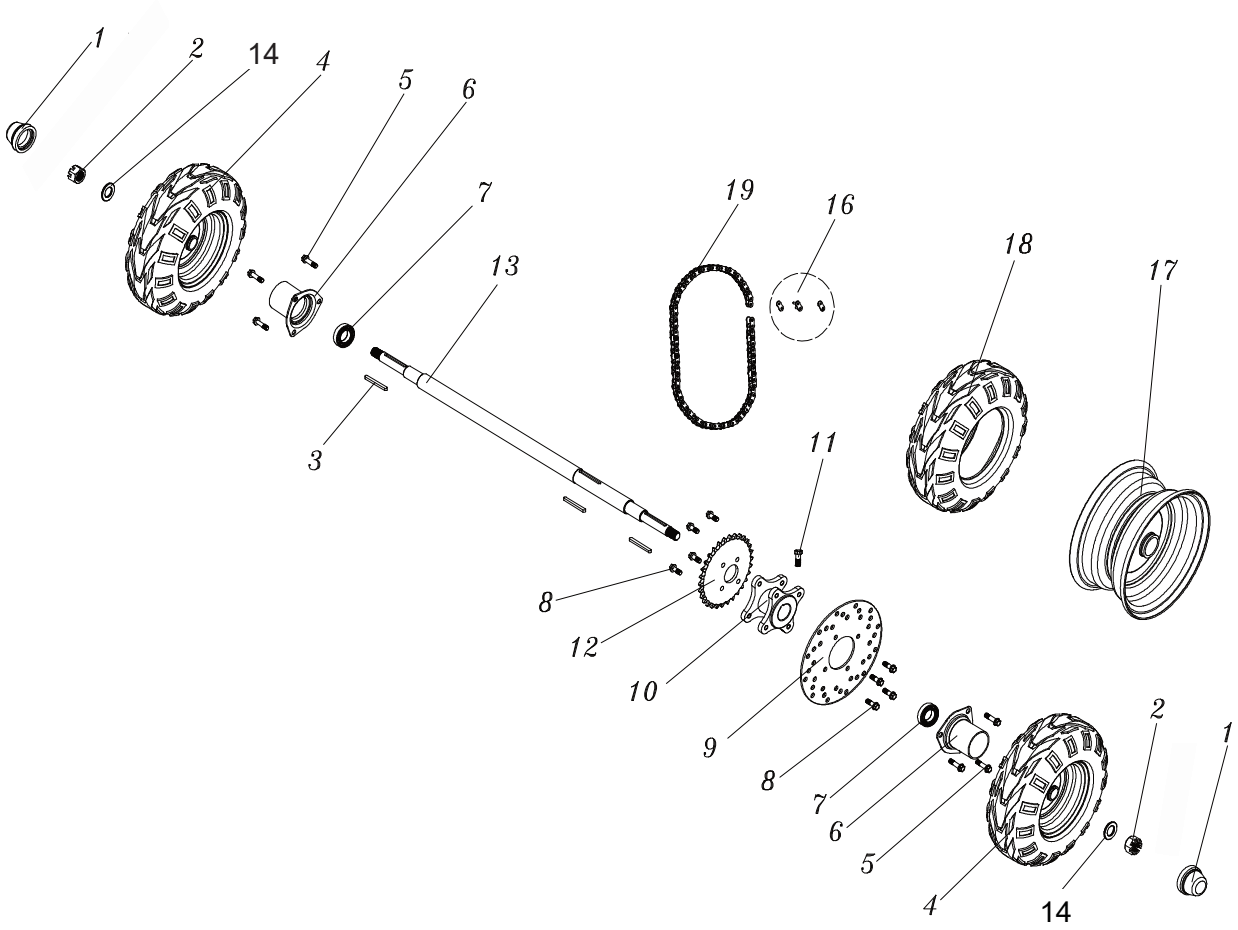

Ref Num	Part Num	Description	Qty
1	7.020.039	HUB COVER	2
2	9.220.014	LOCKING FLANGE NUT M14	2
3	8.010.138	AXLE KEY	3
4	6.000.170	REAR TIRE/WHEEL ASM. (black wheel)	2
5	9.108.016	FLANGE BOLT M8X1.25X16	6
6	6.000.196	AXLE COVER	2
7	9.030.002	BEARING 6204	2
8	9.106.016	FLANGE BOLT M6X16	8
9	8.010.098	DISC BRAKE RR	1
10	8.010.097	REAR AXLE HUB	1
11	9.129.816	ALLEN HEAD BOLT M8X1.25X16	1
12	8.010.099	REAR SPROCKET	1
13	14-1101-00	REAR AXLE	1
14	9.300.014	FLAT WASHER 14	2
15	7.190.018	AIR VALVE	2
16	6.000.199	MASTER LINK	1
17	6.000.183	REAR WHEEL (black)	2
18	001-136005-00	TIRE,RR 13X5-6	2
19	9.070.004-S	DRIVE CHAIN	1

ENGINE / ENGINE MOUNT / SEAT / ELECTRICAL

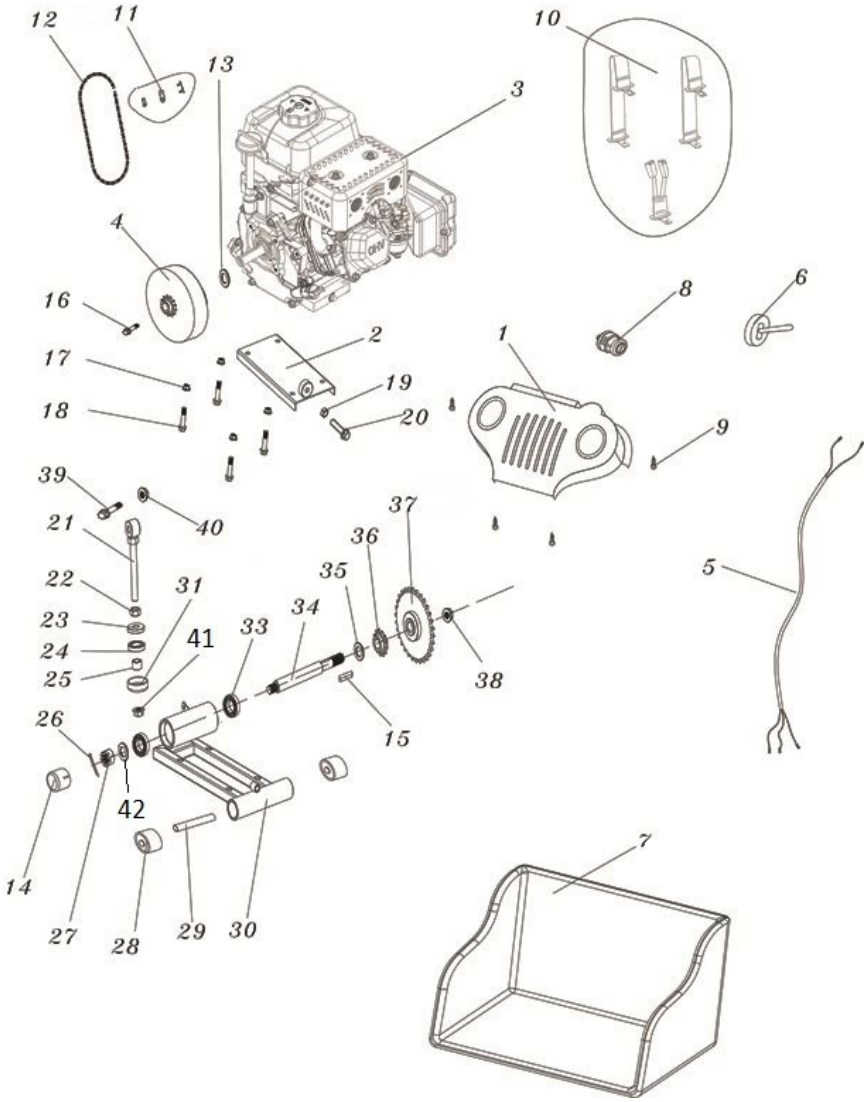

Ref Num	Part Num	Description	Qty
1	14-0205-00	SWITCH PANEL COVER	1
2	14-0604-00	ENGINE MOUNTING PLATE	1
3	006-LCT136	ENGINE COMP. (50 state)	1
4	14-1102-00	CLUTCH with 12 tooth sprocket	1
5	21-0303-00	WIRE HARNESS	1
6	20-0320-00	ON/OFF ENGINE TOGGLE SWITCH	1
7	6.000.176	SEAT COMP.	1
8	6.000.165	POWER ON SWITCH (Key Switch)	1
9	003-520013-00	Self Tapping Screw 4.2x10	4
10	6.000.179	SAFETY BELT	1
11	6.100.324	MASTER LINK	1
12	14-1103-01	DRIVE CHAIN (420x52L)	1
13	003-96850-00	Clutch Washer	1
14	14723	Rubber Cover	1
15	14-1105-00	Rear Clutch Axle Key	1
16		BOLT 5/16-24X1.75"	1
17	9.220.008	LOCKING FLANGE NUT M8	4
18	9.108.055	BOLT M8X55	4
19	9.200.008	NUT M8	1
20	9.108.060	BOLT M8X60	1

Ref Num	Part Num	Description	Qty
21	8.147.008	CHAIN ADJUSTER	1
22	9.200.012	NUT M12X1.25	1
23	8.010.042	WASHER-CHAIN ADJUSTER	2
24	7.020.001	SPACER-CHAIN ADJUSTER	1
25	8.010.041	BUSHING-CHAIN ADJUSTER	1
26	9.500.002	COTTER PIN ¢2.5X30	1
27	9.800.014	CASTLE NUT M14X1.5	1
28	7.020.056	ENGINE PLATE BUSHING	2
29	14-0503-00	COLLAR	1
30	14-0605-00	ENGINE MOUNTING FRAME	1
31	8.020.045	BOTTOM CAP WASHER-CHAIN ADJUSTER	1
33	6.100.065	BEARING 6004	2
34	14-1104-00	Shaft,Sprocket and Drive Pulley	1
35	9.701.016-K	KEYWAY FLAT WASHER 16	1
36	008-13-06B	13 Teeth Sprocket	1
37	008-36-420	36 Teeth Sprocket	1
38	9.700.098	NYLON LOCK NUT M16	1
39	9.110.045	BOLT M10X1.25X45	1
40	9.220.010	Nut M10	1
41	9.220.012	LOCK NUT M12	1
42	9.300.014	FLAT WASHER 14	1