Hammerhead Off-Road

2017-2018 R-150

10th letter in VIN: H-J

Illustrated Parts Manual

R-150 Wire Diagram

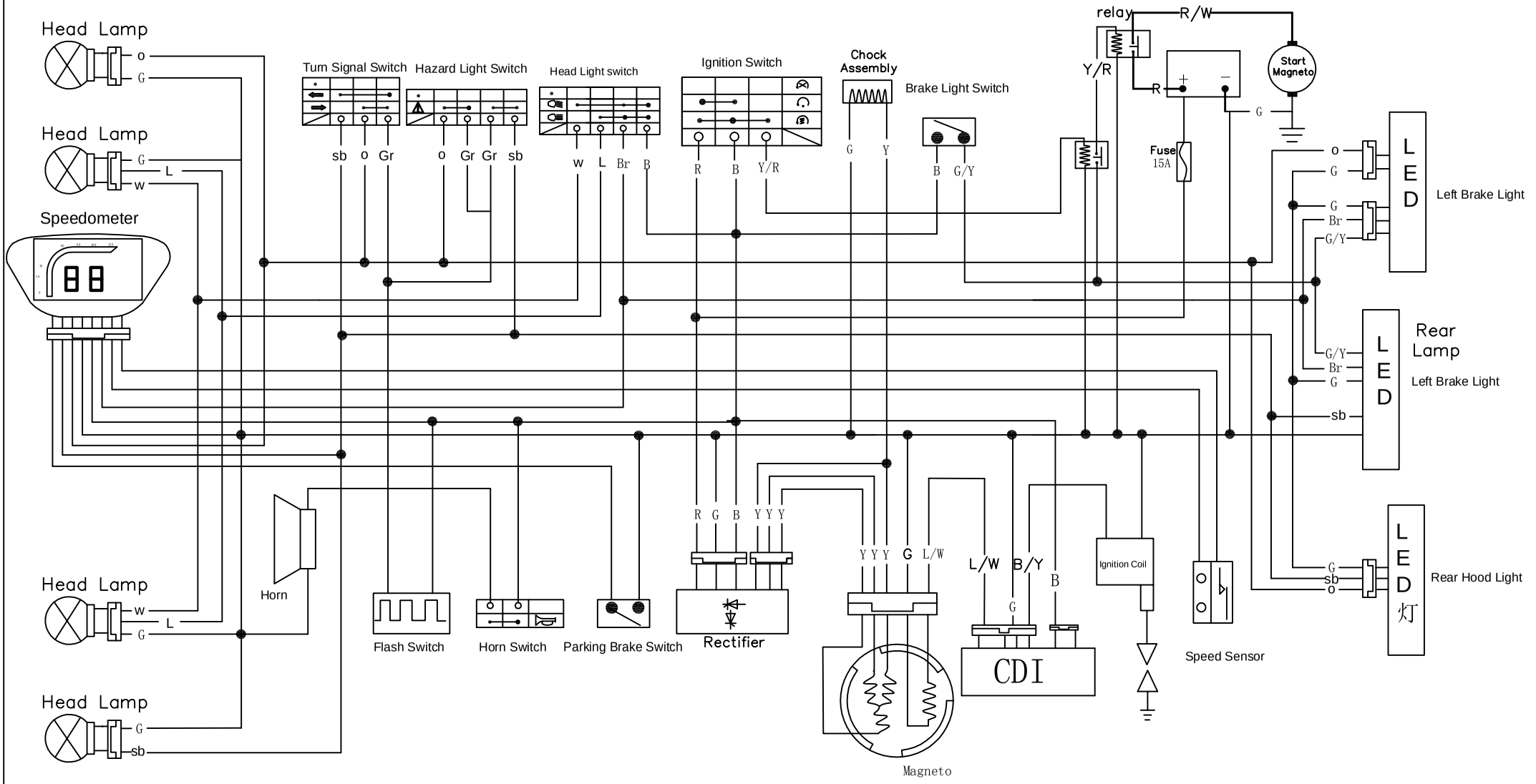

FIG.1

CYLINDER HEAD ASSY.

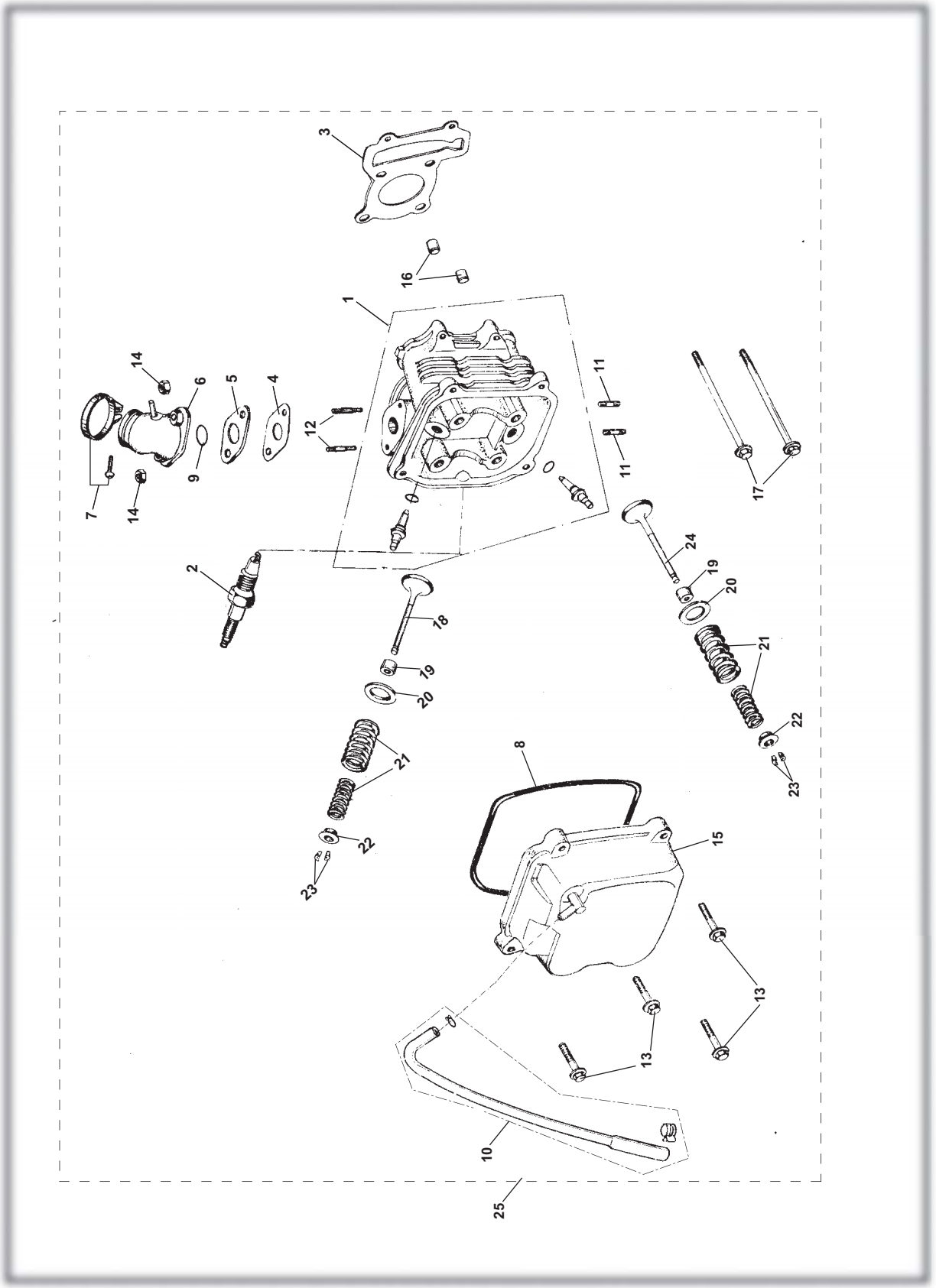

CYLINDER HEAD ASSY.

REF NO.	PART NO.	DESCRIPTION	REGD NO.	
1	M150-100-1320	CYLINDER HEAD	1	
2	98056-57713-00	SPARK PLUG (C7HSA NGK)	1	
3	M150-1001010	CYLINDER HEAD GASKET	1	
4	M150-3050352	CARBURETOR INSULATOR GASKET	1	
5	M150-1001005	CARBURETOR INSULATOR	1	
6	M150-1001210	PIPE COMP. IN	1	
7	M150-1001220	INSULATOR BAND	1	
8	M150-1001103	HEAD COVER GASKET	1	
9	M150-1001201	O-RING 27X2	1	
10	M150-1001001	BREATHER TUBE	1	
11	M150-1001011	STUD BOLT M6X18	2	
12	M150-1001006	STUD BOLT M6X50	2	
13	M150-B-1003075	FLANGE BOLT M6X25	4	
14	95500-06001-KAS	NUT FLANGE M6-ZN. D	2	
15	M150-1001100	CYLINDER HEAD COVER COMP.	1	
16	M150-1001007	DOWEL PIN 10X16	2	
17	M150-1003007	CYLINDER HEAD BOLT FLANGE M6X100	2	
18	M150-1001301-N	INTAKE VALVE	1	
19	M150-1001310	VALVE STEM SEAL	2	
20	M150-1001302	VALVE SPRING OUTER SEAT	2	
21	M150-1001303	VALVE OUTER, INNER SPRING	2	
22	M150-1001305	VALVE SPRING RETAINER	2	
23	M150-1001306	VALVE COTTER	4	
24	M150-1001307-N	EXHAUST VALVE	1	
25	M150-100-1320-C	CYLINDER HEAD ASM.**	1	
	**does not include valve cover/hardware, intake/hardware , and spark plug			

CYLINDER ASSY.

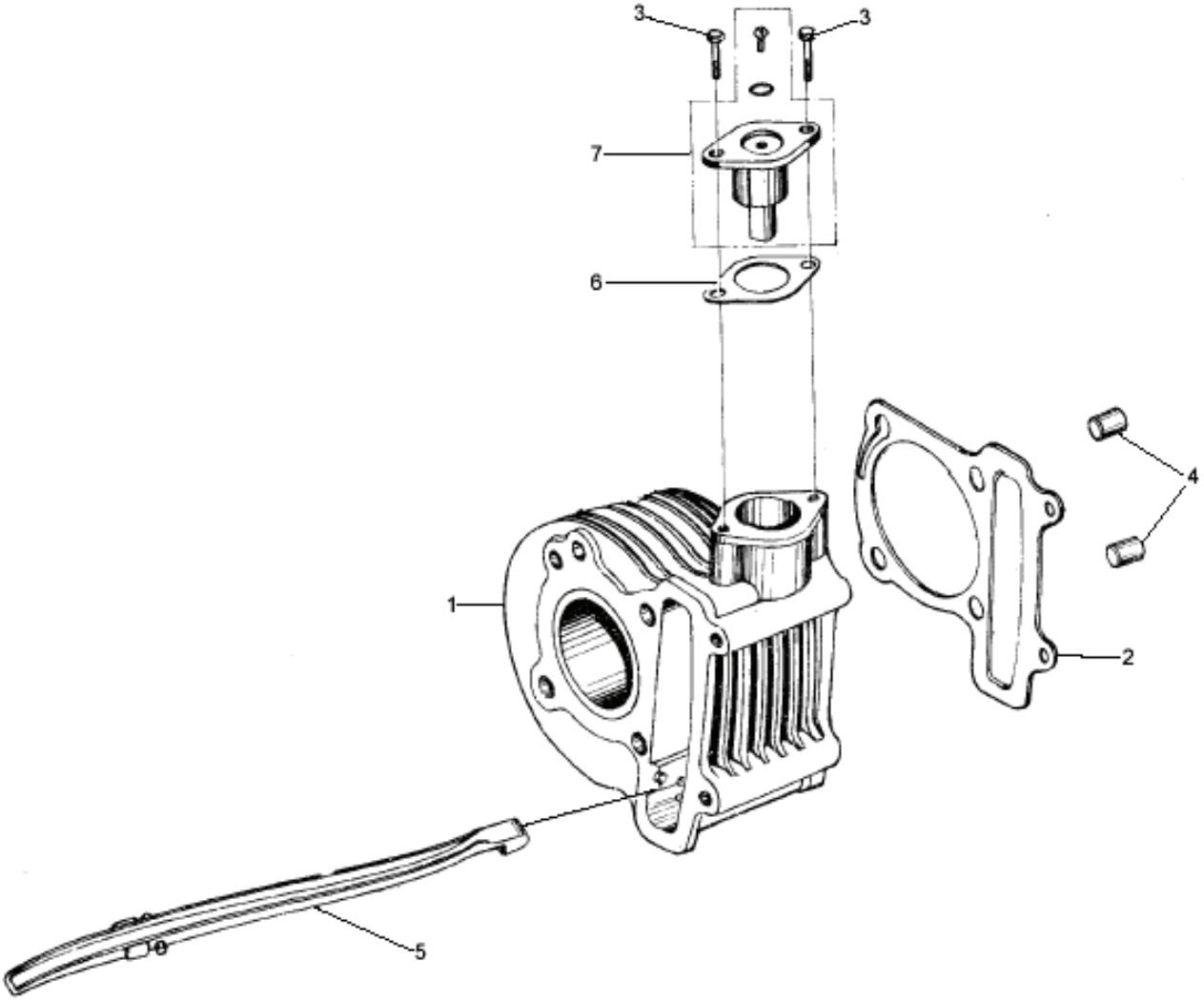

Ref No	Part No	Description	QTY
1	M150-1002200	Head, Cylinder - 150cc	1
2	M150-3050351	Gasket, Cyl Head Low er - 150cc	1
3	96001-06020-KAT	Bolt, M6 x 1.00 x 22 FHCS	2
4	M150-1001007	Pin, M10 x 16 Dow el	2
5	M150-1002100	Tensioner, Cam Chain - 150cc	1
6	M150-3050347	Gasket, Cam Chain Tensioner - 150cc	1
7	M150-1002100	Asm, Cam Chain Tensioner - 150cc	1

CRANKCASE ASSY. (1)

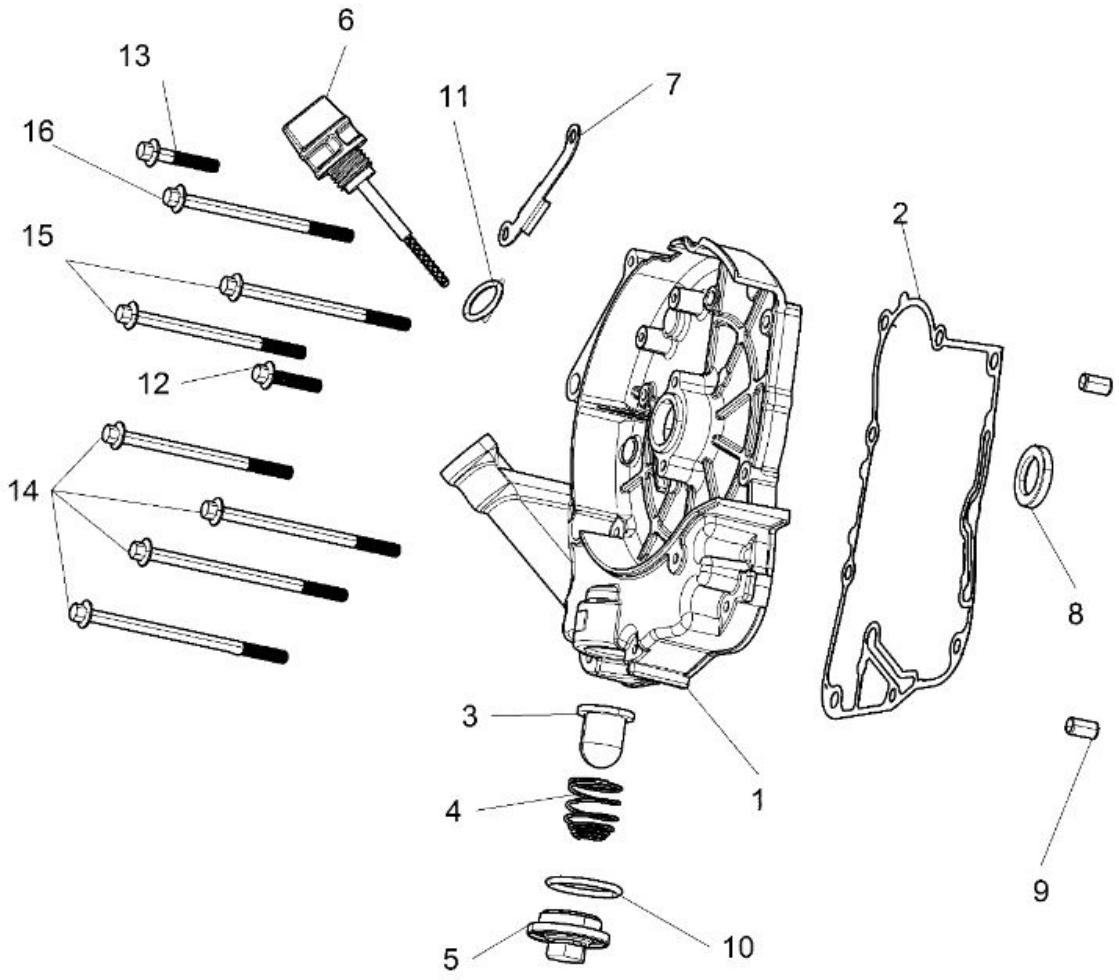

ENGINE, CRANKCASE COVER ASM, RIGHT			
Ref#	**Part #**	**Description**	**Quantity**
1	M150-1003101	CRANKCASE COVER, RH	1
2	M150-3050350	GASKET, CRANKCASE COVER, RH	1
3	M150-1003120	OIL FILTER SCREEN	1
4	M150-1003102	OIL FILTER SCREEN SPRING	1
5	M150-1003104	COVER, OIL FILTER SCREEN	1
6	M150-1003105	DIPSTICK	1
7	M150-1003006	CLAMP, A.C. GENERATOR CORD	1
8	M150-1003110	OIL SEAL 19.8X30X5	1
9	M150-1003005	DOWEL PIN 8X14	2
10	M150-1003103	O-RING 30.8X3.2	1
11	M150-1003307	O-RING 18X3	1
12	M150-1003034	BOLT M6X35	1
13	96001-0632-KAT	BOLT M6X28	1
14	M150-1003012	BOLT M6X95	4
15	M150-1003008	BOLT M6X110	2
16	M150-1003007	BOLT M6X100	1

Engine Crankcase

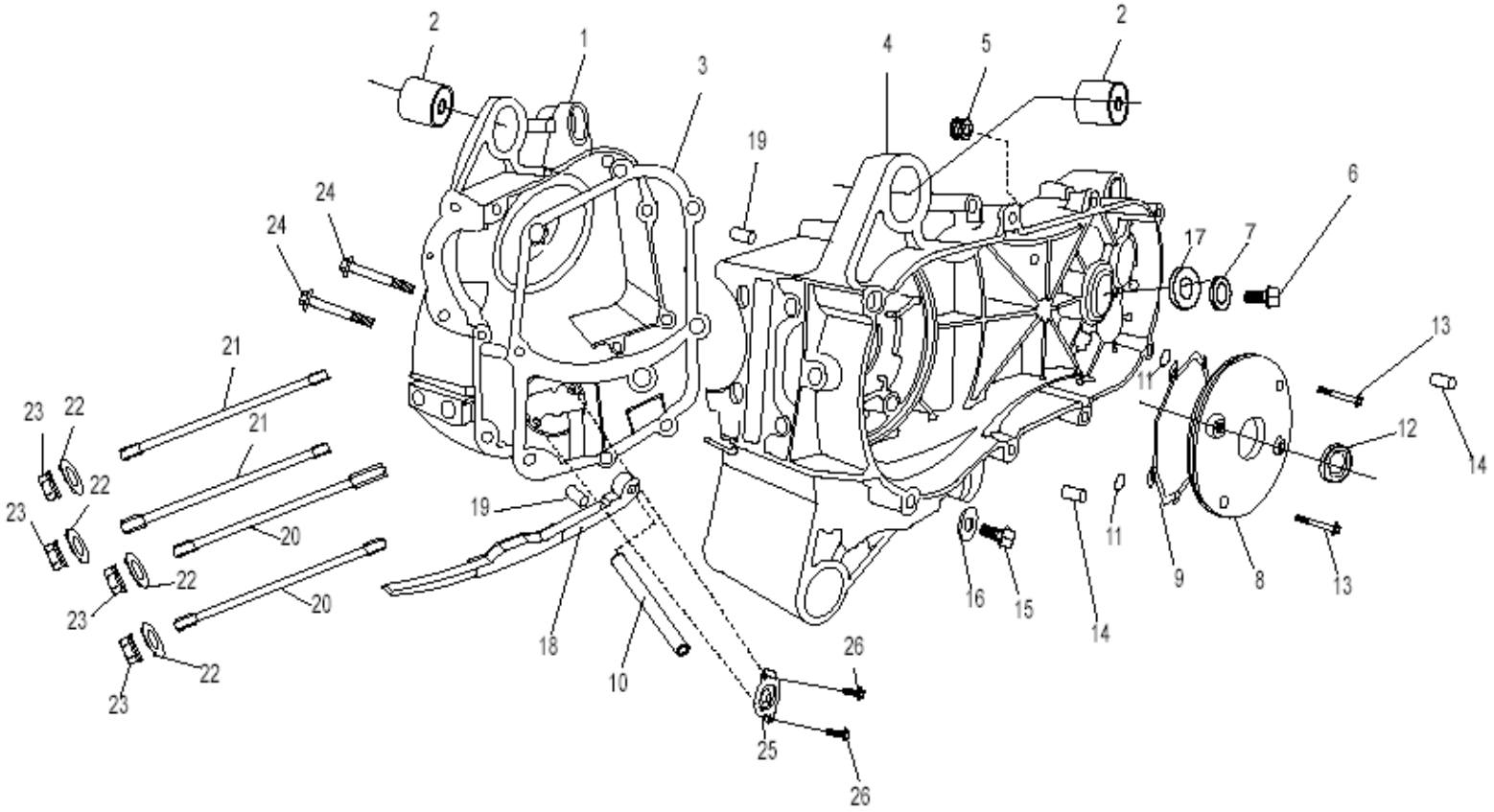

Ref No	Part No	Description	QTY
1	14277	HOUSING, CRANKCASE RH - 150CC	1
2	14278	BUSHING, ENGINE HANGER - 150CC	2
3	M150-3050348	GASKET, CRANKCASE - 150CC	1
4	14280	HOUSING, CRANKCASE LH - 150CC	1
5	14558	GROMMET	1
6	14281	BOLT, M10 X 1.25 X 15 FHCS ZN	1
7	14282	WASHER, M10.2 X 18 X 1.3 FLAT	1
8	14283	COVER, SMALL LEFT - 150CC	1
9	14284	O-RING, M108 X 2	1
10	14559	PIN	1
11	14285	O-RING, M6 X 1.8	2
12	M150-1003110	OIL SEAL 19.8 X 30 X 5	1
13	14286	BOLT, M6 X 1.00 X 18 FHCS ZN	4

Ref No	Part No	Description	QTY
14	14287	PIN, M10 X 14 DOWEL	2
15	14288	BOLT, M12 X 1.5 SPECIAL - 150CC	1
16	14289	WASHER, M12 FLAT ZN	2
17	M150-1042000	SEAL, M20 X 32 X 6	2
18	14883	GUIDE, CAM CHAIN - 150CC	1
19	50016	PIN DOWEL SPECIAL 8 X 14	2
20	14291	STUD, M8 X 1.25 X 195.5	2
21	14292	STUD, M8 X 1.25 X 187.5	2
22	14293	WASHER, M8 FLAT ZN	4
23	14294	NUT, M8 X 1.25 FLANGE HEAD	4
24	14295	BOLT, M6 X 1.00 X 50 FHCS ZN	2
25	14501	SPACER, OIL - 150CC	1
26	14296	BOLT, M6 X 1.00 X 12 FHCS ZN	2

Transmission

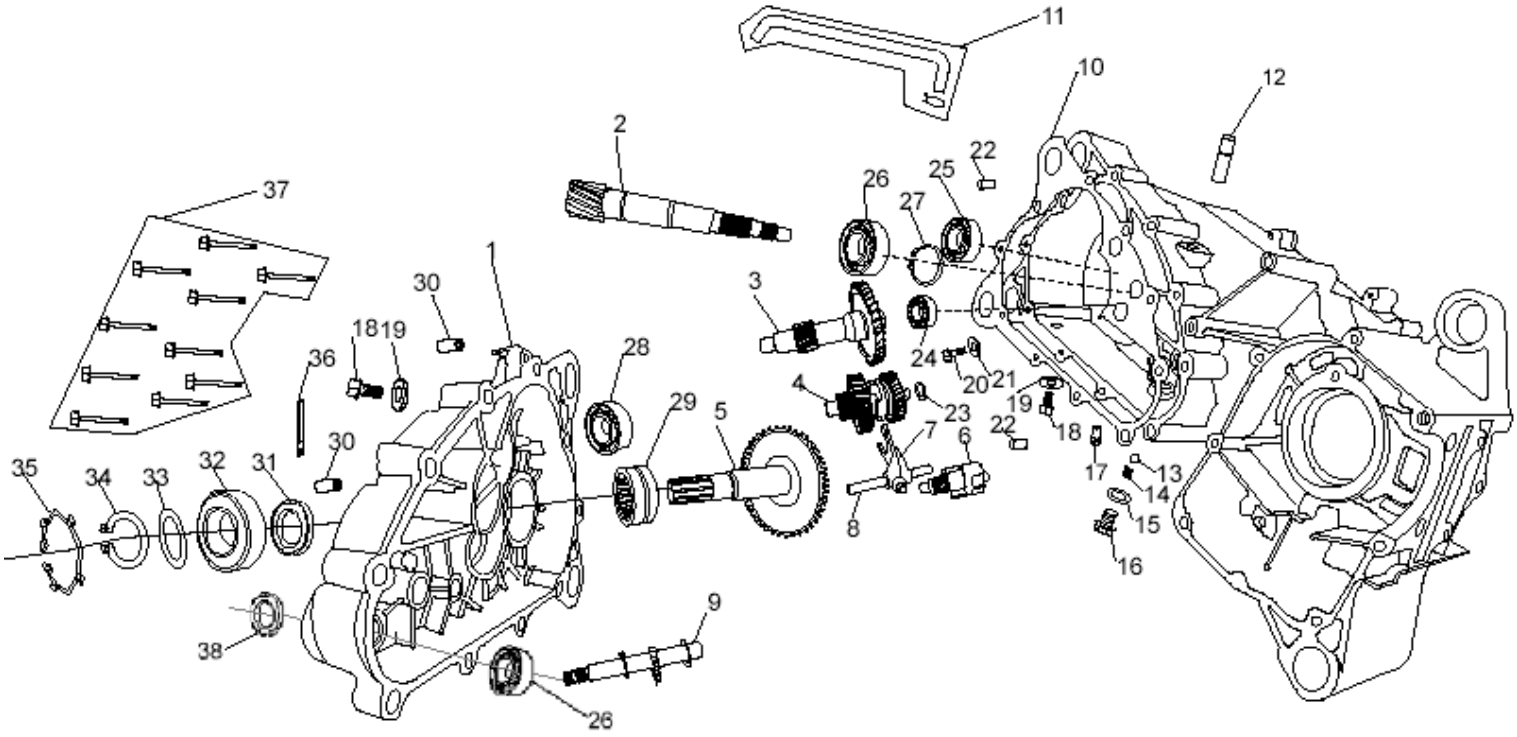

Ref No	Part No	Description	QTY
1	14297	HOUSING, OUTER TRANSMISSION - 150CC	1
2	14298	GEAR, PRI DRIVE - 150CC	1
3	14299	GEAR, SEC DRIVE - 150CC	1
4	14300	ASM, SHIFT GEAR CLUSTER D/N/R - 150CC	1
5	14301	GEAR, FINAL DRIVE SHAFT - EXT - 200S	1
6	14302	ASM, SHIFT SELECTOR - 150CC	1
7	14303	PAWL, SHIFT SELECTOR - 150CC	1
8	14304	ROD, SHIFT PAWL - 150CC	1
9	14305	SHAFT, SHIFTER CAM - 150CC	1
10	M150-3050349	GASKET, TRANSMISSION CASE - 150CC	1
11	14307	TUBE, TRANSMISSION VENT - 150CC	1
12	14308	NIPPLE, VENT TUBE - 150CC LARGE	1
13	14309	BALL, SHIFT INDENT - 150CC	1
14	14310	SPRING, SHIFT INDENT - 150CC	1
15	14311	GASKET, SHIFT INDENT - 150CC	1
16	14312	BOLT, SHIFT INDENT - 150CC	1
17	14502	NIPPLE, VENT TUBE - 150CC SMALL	1
18	14313	BOLT, DRAIN/FILL PLUG - 150CC	2
19	14314	GASKET, TRANS DRAIN PLUG - 150CC	2

Ref No	Part No	Description	QTY
20	14296	BOLT, M6 X 1.00 X 12 FHCS ZN	2
21	14315	WASHER, M6 FLAT	2
22	14287	PIN, M10 X 14 DOWEL	2
23	14316	SPACER, M15 INNER GEAR - 150CC	1
24	14149	BEARING, OUTER - 6202-Z	1
25	50102	BEARING BALL RADIAL 6203	1
26	14146	BEARING, INNER - 6204-Z	1
27	14106	CIRCLIP, M20	1
28	14503	BEARING, 6302 15 X 42 X 13	1
29	14504	BEARING, RNA4905 30 X 42 X 17	1
30	14505	BUSHING, SHOCK ABSORBING - 150CC	2
31	14318	SEAL, M30 X 40 X 6	1
32	14598	BEARING, SEALED 6205 - 150CC	1
33	14511	WASHER, M22 X 31 X 2.5 FLAT	1
34	14319	CIRCLIP, M25	1
35	14320	CIRCLIP, M52	1
36	14321	CLAMP, WIRE - 150CC	1
37	14235	BOLT, M6 X 1.00 X 40 FHCS ZN	10
38	14597	OIL SEAL, SHIFTER CAM - 150CC	1

CRANKSHAFT CON'ROD & PISTON ASSY.

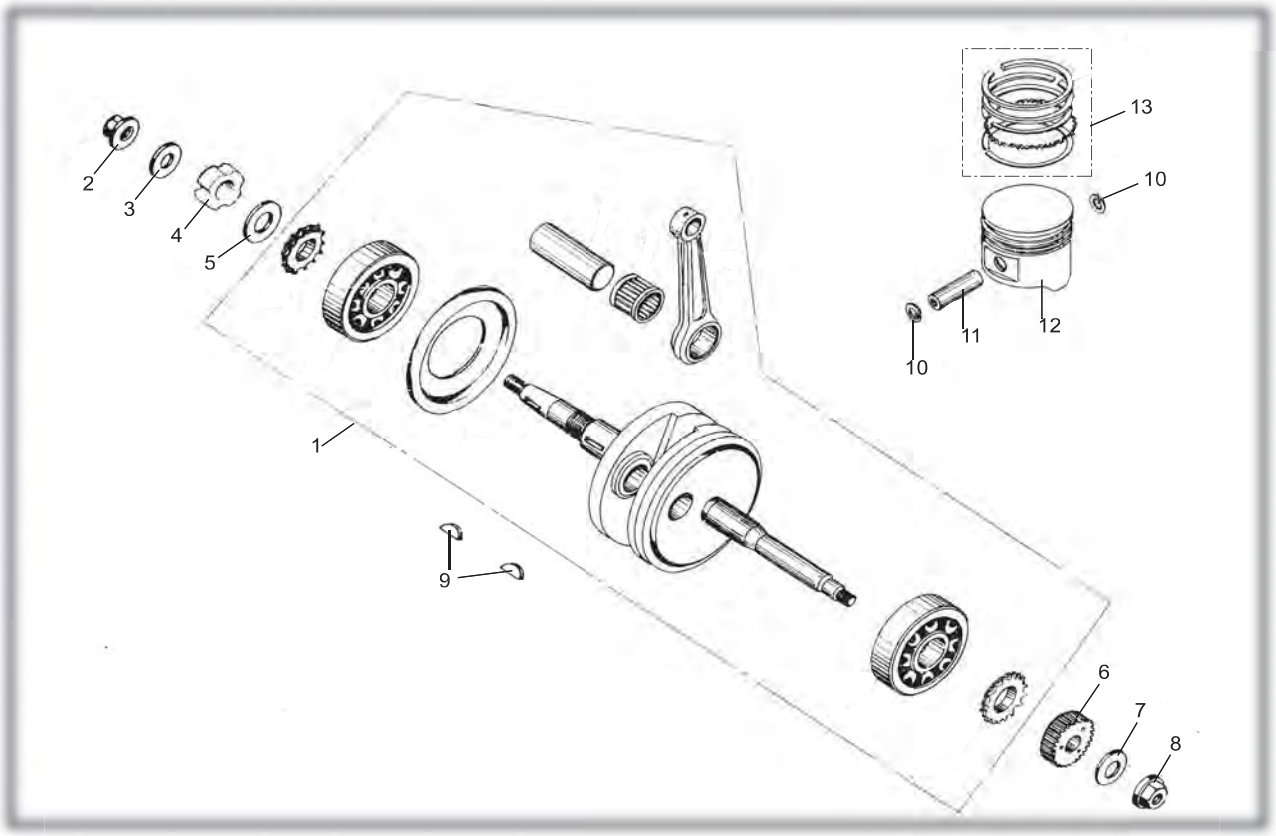

CRANKSHAFT CON'ROD & PISTON ASSY.				
REF NO.	PART NO.	DESCRIPTION	REGD NO.	
1	M150-1004100-N	CRANKSHAFT & CONROD ASSY.	1	
2	M150-1004007	NUT M12X1.25	1	
3	M150-1004011	WASHER 12-149HV 12-140HV	1	
4	M150-1004009	SPANNER NUT (left hand thread)	1	
5	M150-1004013	WASHER	1	
6	M150-1004012	KICK DRIVE GEAR	1	
7	M150-1040005	WASHER Φ12	1	
8	M150-1004008	NUT M12	1	
9	M150-1004002	WOODRUFF KEY	2	
10	M150-1004003	PISTON PIN CLIP	2	
11	M150-1004006	PISTON PIN	1	
12	M150-1004001	PISTON	1	
13	M150-1004200	PISTON RING SET	1	

CAMSHAFT ASSY.

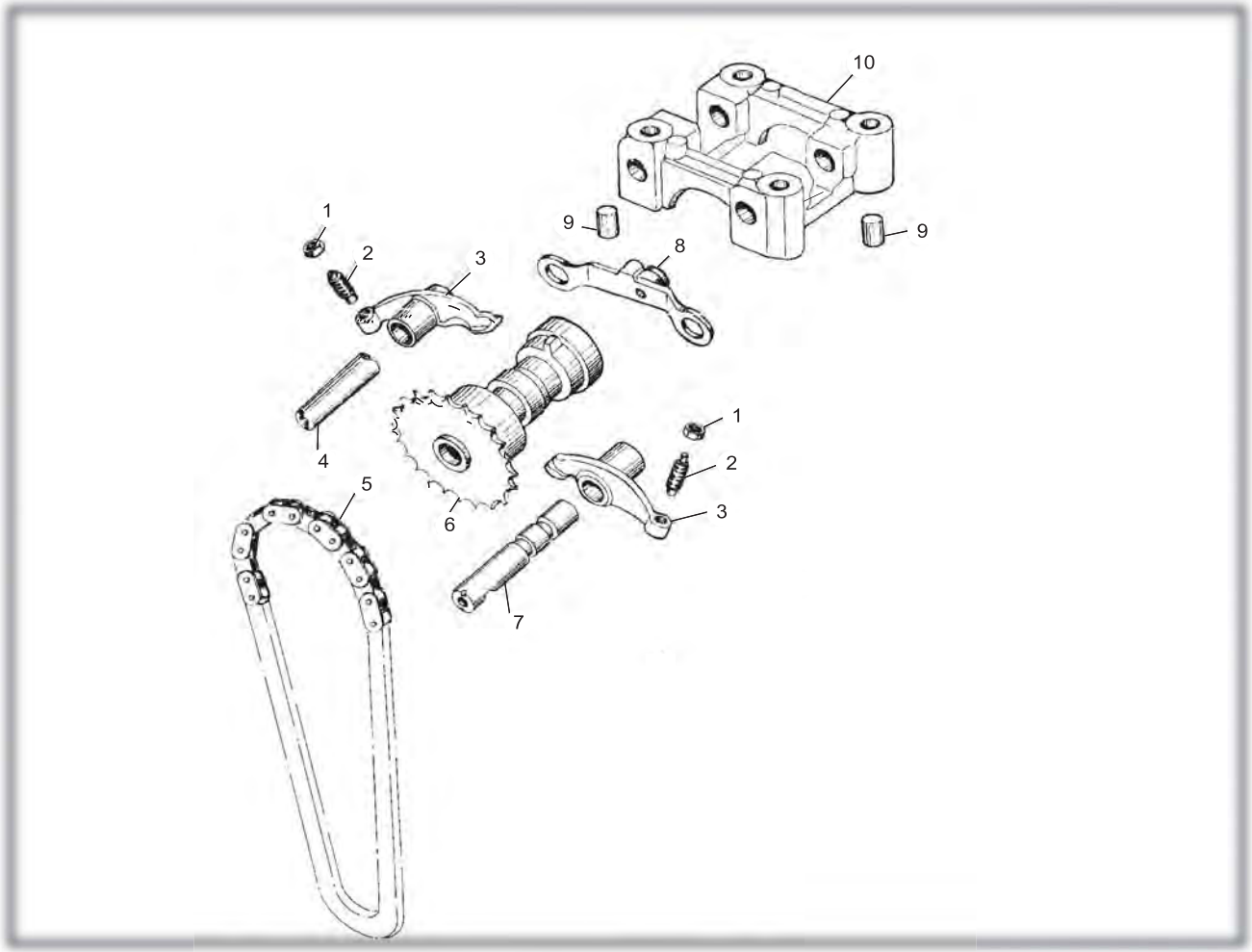

CAMSHAFT ASSY.				
REF NO.	PART NO.	DESCRIPTION	REGD NO.	
1	M150-1005004	TAPPET ADJUSTING NUT	2	
2	M150-1005003	TAPPET ADJUSTING SCREW	2	
3	M150-1005002	VALVE ROCKER ARM	2	
4	M150-1005005	EX ROCKER ARM SHAFT	1	
5	M150-1005400	CAMSHAFT CHAIN	1	
6	M150-1005300-N	CAMSHAFT COMP. 16T	1	
7	M150-1005200	IN ROCK ARM SHAFT COMP.	1	
8	M150-1005100	STOPPER PLATE COMP.	1	
9	M150-1001007	DOWEL PIN 10X16	2	
10	M150-1005001-N	CAMSHAFT HOLDER	1	

LEFT COVER ASSY.

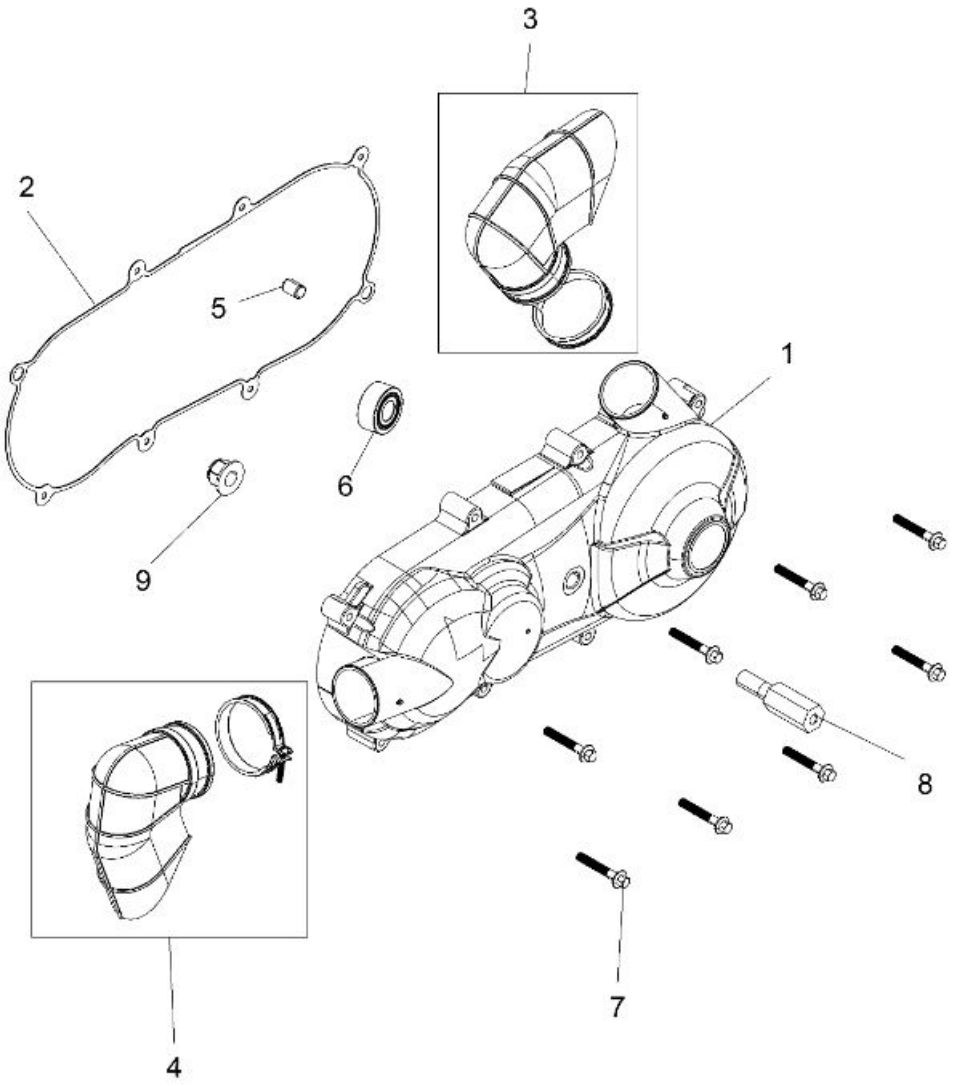

		DRIVE TRAIN CLUTCH COVER AND DUCTING	
Ref#	**Part #**	**Description**	**Quantity**
1	M150-1008101-N	CRANKCASE COVER, LH	1
2	M150-3050353	GASKET, CRANKCASE COVER, LH	1
3	14322	ASM., ASPIRTAION CHANNEL, B	1
4	14322	ASM., ASPRIATION CHANNEL, A	1
5	M150-1003005	DOWEL PIN 10X14	2
6	14508	BALL BEARING 6200-2RZ	1
7	9.106.040	BOLT M6X40	8
8	14507	MUFFLER BRACKET	1
9	M150-1004008	NUT M12	1

FAN COVER AND SHROUD ASSY.

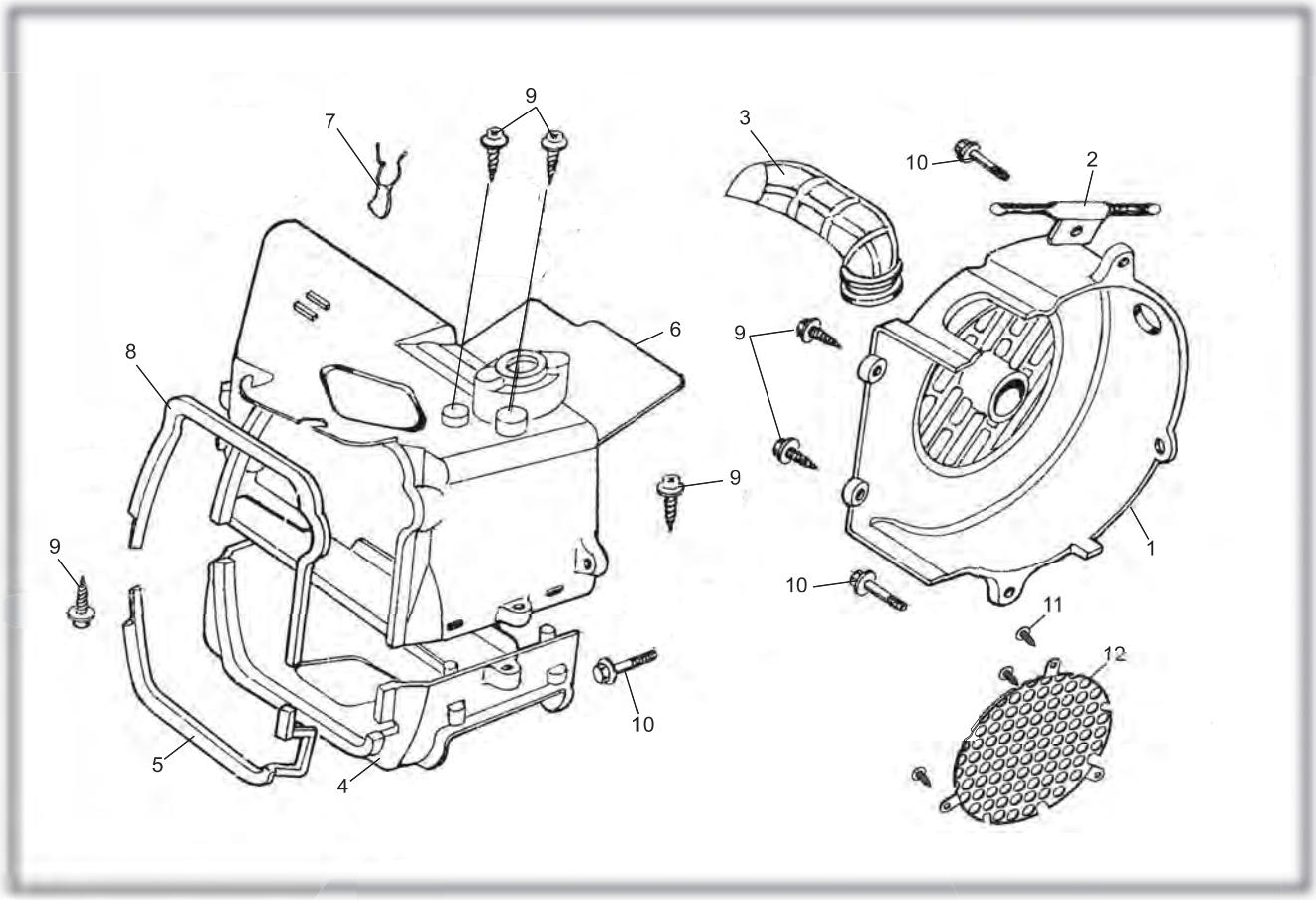

FAN COVER AND SHROUD ASSY.				
REF NO.	**PART NO.**	**DESCRIPTION**	**REGD NO.**	
1	M150-1009410	FAN COVER COMP.	1	
2	M150-1009002	STARTER CABLE CLAMPER	1	
3	M150-1009401	CARBURETOR COOLING DUCT	1	
4	M150-1009301	LOWER SHROUD	1	
5	M150-1009302	LOWER SHROUD SEAL	1	
6	M150-1009110	UPPER SHROUD COMP.	1	
7	M150-1009103	HIGH TENSION CORD CLIP	1	
8	M150-1009102	UPPER SHROUD SEAL	1	
9	M150-1009402	SCREW ST4.8X16-F	6	
10	M150-1003075	BOLT M6X25	3	
11	ST3.5X13 GB845	SCREW ST3.5×13-F	3	
12	8.020.179	DUST COVER	1	

OIL PUMP ASSY.

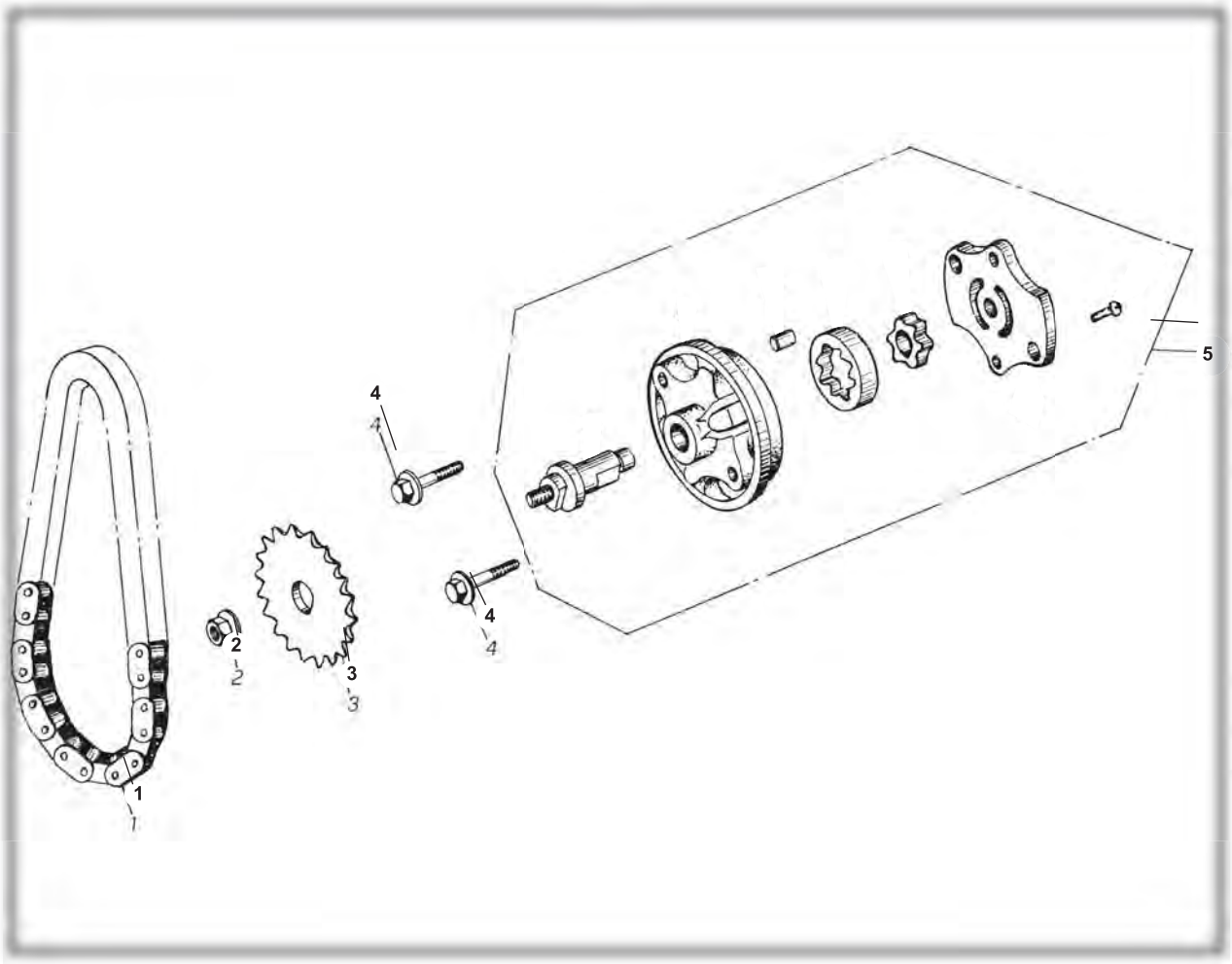

OIL PUMP ASSY.				
REF NO.	PART NO.	DESCRIPTION	REGD NO.	
1	M150-1021000	CHAIN OIL PUMP	1	
2	M150-1020002	NUT FLANGE M6	1	
3	M150-1020001	SPROCKET OIL PUMP DRIVEN	1	
4	M150-1003075	BOLT M6X25	2	
5	M150-1022000	OIL PUMP SUB ASSY.	1	

DRIVEN PULLEY AND CLUTCH SUBASSY.

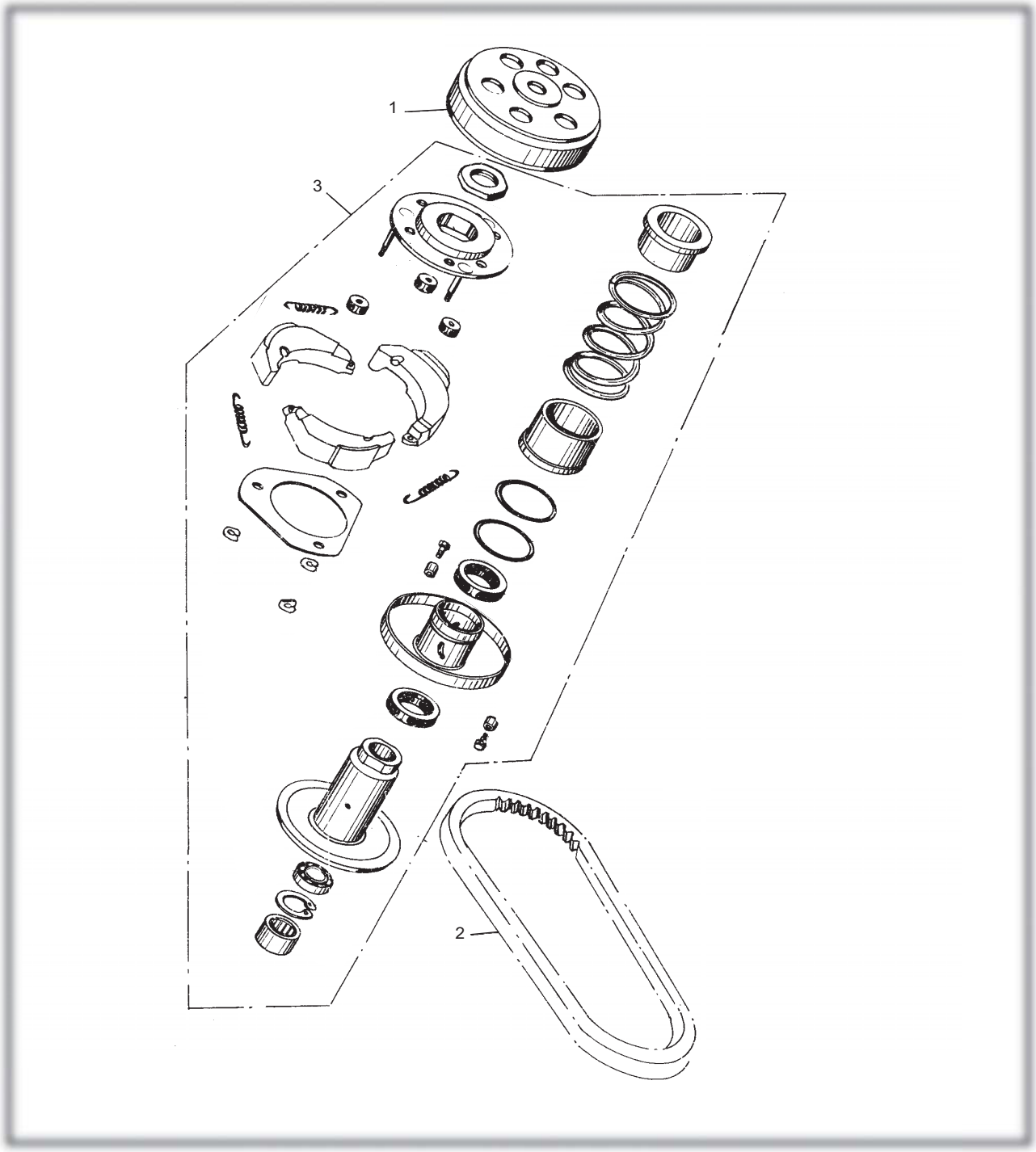

DRIVEN PULLEY AND CLUTCH SUBASSY.				
REF NO.	PART NO.	DESCRIPTION	REGD NO.	
1	M150-1032000	CLUTCH ASSY. OUTER	1	
2	M150-1033000	DRIVE BELT	1	
3	M150-1031000	DRIVEN PULLEY ASSY.	1	

ELECTRIC SYSTEM

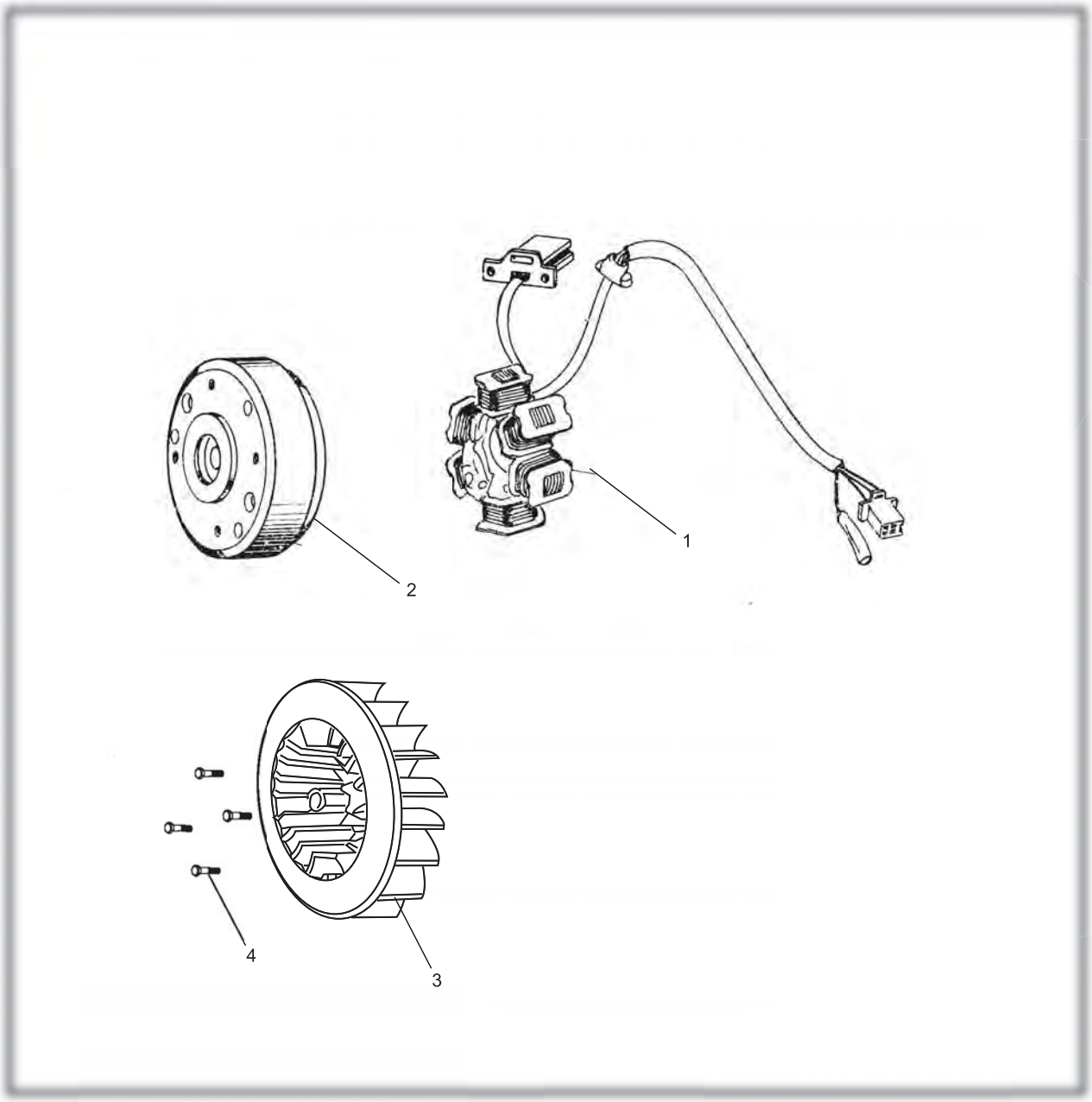

ELECTRIC SYSTEM				
REF NO.	PART NO.	DESCRIPTION	REGD NO.	
1	15120	STATOR -HO	1	
2	M150-1051100	FLYWHEEL COMP.	1	
3	M150-1051100-3	COOLING FAN COMP.	1	
4	M150-1051100-4	FLANGE BOLT M6x18	4	

ELECTRIC STARTER ASSY.

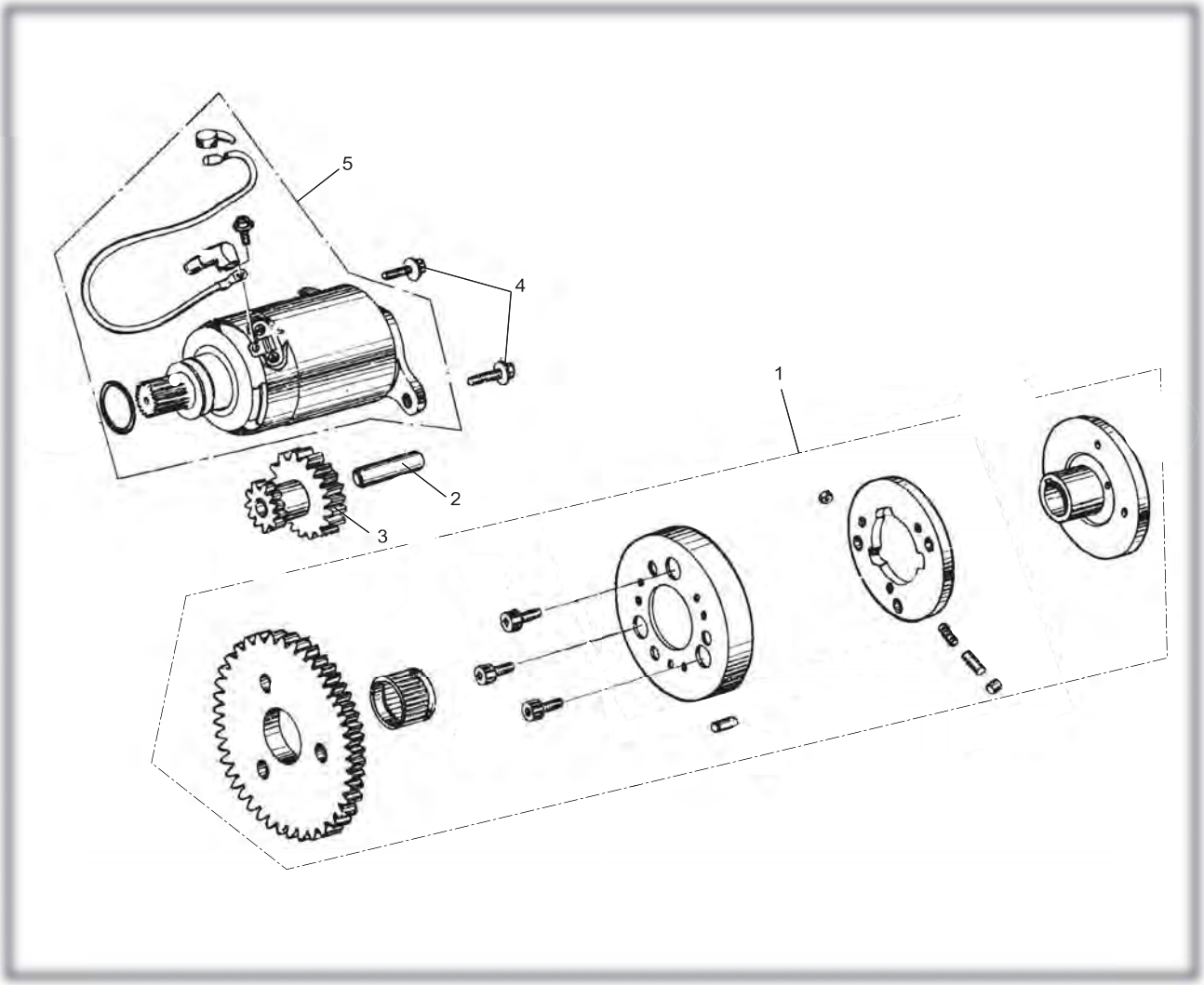

ELECTRIC STARTER ASSY.				
REF NO.	**PART NO.**	**DESCRIPTION**	**REGD NO.**	
1	M150-1060001	FLANGE STARTING CLUTCH	1	
2	M150-1060002	STARTER REDUCTION GEAR SHAFT	1	
3	M150-1060003	STARTER REDUCTION GEAR	1	
4	M150-1060005	FLANGE BOLT M6X16	2	
5	M150-1064000	STARTER MOTOR ASSY.	1	

DRIVE PULLEY SUBASSY.

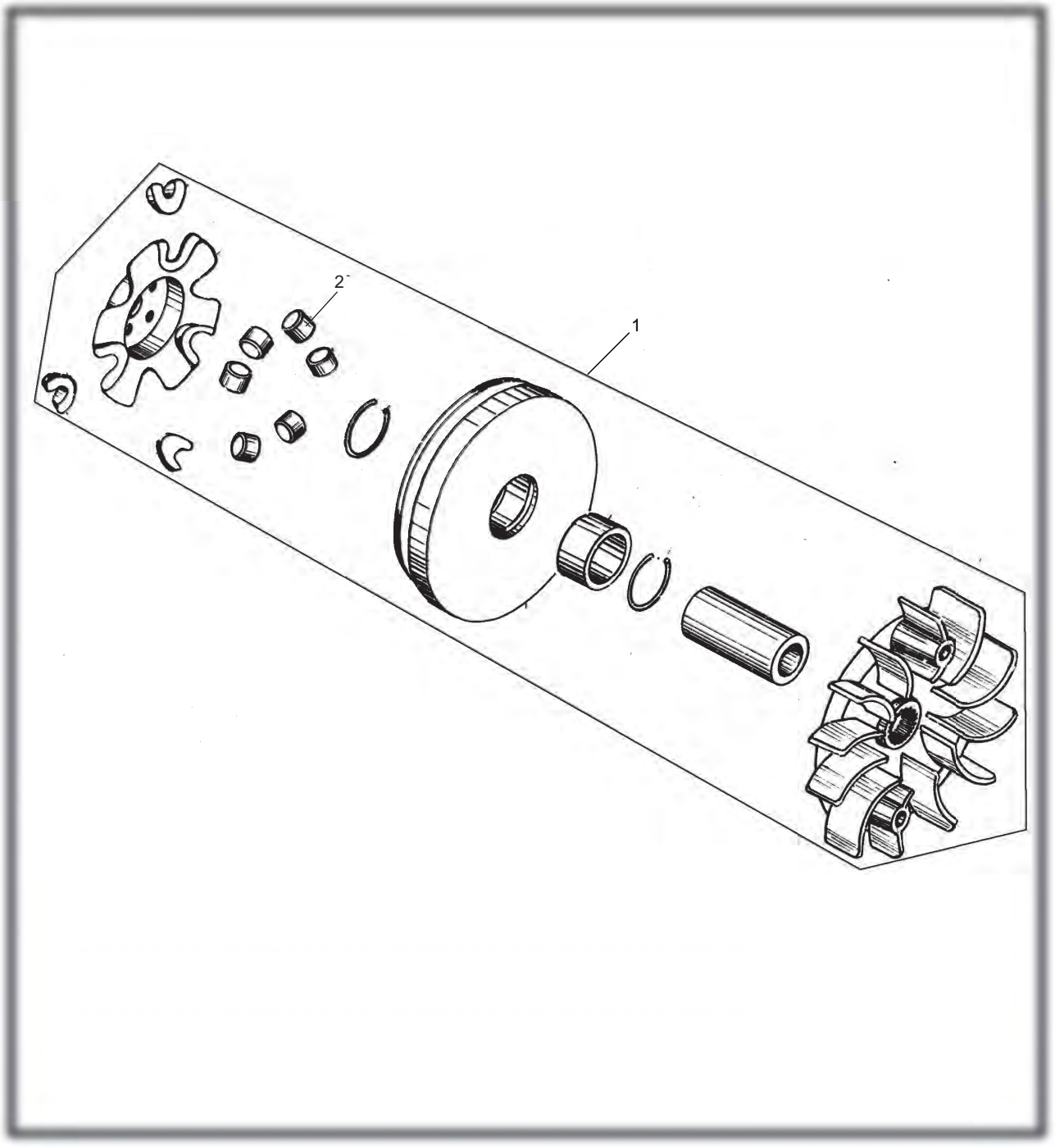

DRIVE PULLEY SUBASSY.				
REF NO.	PART NO.	DESCRIPTION	REGD NO.	
1	M150-1071000	MOVABLE DRIVE PULLEY ASSY.	1	
2	M150-1071002	ROLLER	6	

Plastic Body Parts

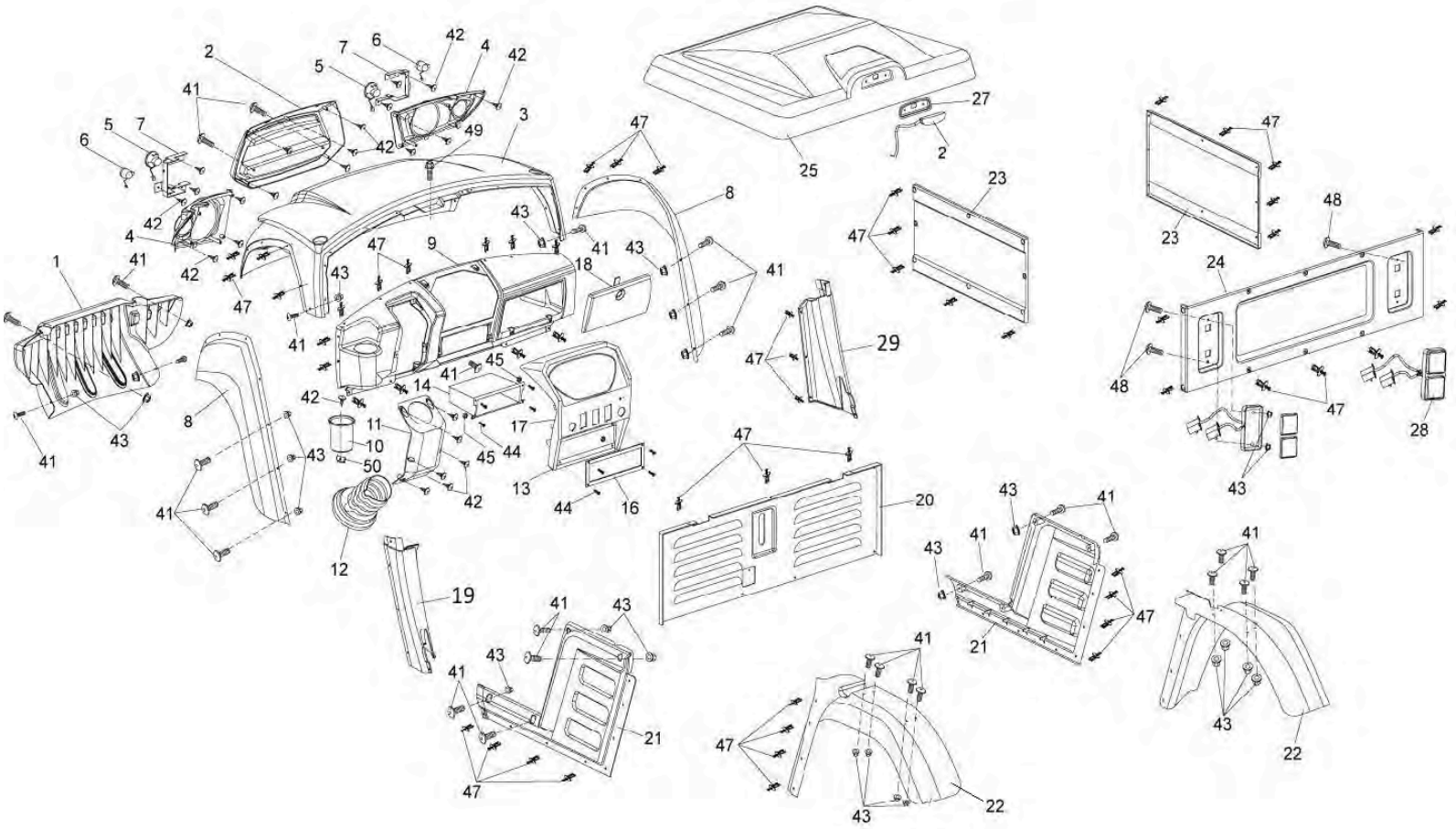

REF#	HH PART#	DESCRIPTION	PCS
F1-1	15-0208-00	FRONT BUMPER	1
F1-2	15-0203-00	FRONT HOOD INSERT	1
F1-3	15-0201-00-	HOOD UPPER (-color needed)	1
F1-4	15-0209-00L	HEADLIGHT COVER, LEFT	1
	15-0209-00R	HEADLIGHT COVER, RIGHT	
F1-5	15-0206-00	HEADLIGHT	2
F1-6	15-0210-00	FRONT BLINKER	1
F1-7	15-0607-00	HEADLIGHT BRACKET	2
F1-8	15-0211-00L	FR. FENDER, LEFT	1
	15-0211-00R	FR. FENDER, RIGHT	
F1-9	15-0214-00	DASHBOARD	1
F1-10	15-0212-00	CUP HOLDER	1
F1-11	18-0213-00	PROTECTIVE PANEL, STEERING SHAFT	1
F1-12	15-0504-00	BOOT, STEERING SHAFT	1
F1-13	15-0205-00	CENTER CONSOLE	1
F1-14	15-0215-00	CD PLAYER SLOT	1
F1-15			1
F1-16	15-0216-00	COVER, CD PLAYER SLOT	1
F1-17			1
F1-18	15-0217-00	CLOVE COMPARTMENT COVER	1
F1-19	15-0218-00L	LOWER PROTECTIVE PANEL, LEFT	1
F1-20	18-0219-00	SEAT TUB FRONT PANEL	1
F1-21	15-0220-00L	SEAT TUB SIDE PANEL, LEFT	1
	15-0220-00R	SEAT TUB SIDE PANEL, RIGHT	
F1-22	15-0221-00L	TIRE WELL, REAR LEFT	1
	15-0221-00R	TIRE WELL, REAR RIGHT	
F1-23	15-0222-00-	DUMP BED SIDE PANEL (-color needed)	2

REF#	HH PART#	DESCRIPTION	PCS
F1-24	15-0223-00-	DUMP BED BACK PANEL (-color needed)	1
F1-25	15-0224-00-BK	ROOF, Black	1
F1-26	15-0502-00	ROOF BRAKE LIGHT	1
F1-27	15-0506-00	ROOF BRAKE LIGHT RUBBER SEAL	1
F1-28	15-0226-00	REAR TAIL LIGHT	2
F1-29	15-0218-00R	LOWER PROTECTIVE PANEL, RIGHT	1
F1-34			
F1-35			
F1-37			
F1-38			
F1-39			
F1-40			
F1-41	003-060015-00	SCREW CROSS, M6X15	31
F1-42	003-480015-02	SCREW CROSS, ST4.8X15	33
F1-43	9.220.006	SELF-LOCK NUT M6	34
F1-44	003-040010-00	SCREW CROSS, M4X10	10
F1-45	9.220.004	NUT, M4	10
F1-46	003-040025-00	SCREW CROSS, M4X25	1
F1-47	003-000000-03	SCREW, ANCHOR	78
F1-48	003-060010-00	SCREW CROSS, M6X10	4
F1-49	9.108.016	FLANGE BOLT, M8X1.25X15	1
F1-50	15-1809-00	LATCH	1
F1-51	9.106.035	FLANGE BOLT, M6X35	2
F1-52	15-0310-00	12 V POWER OUTLET	1

Overhead Brush Guards

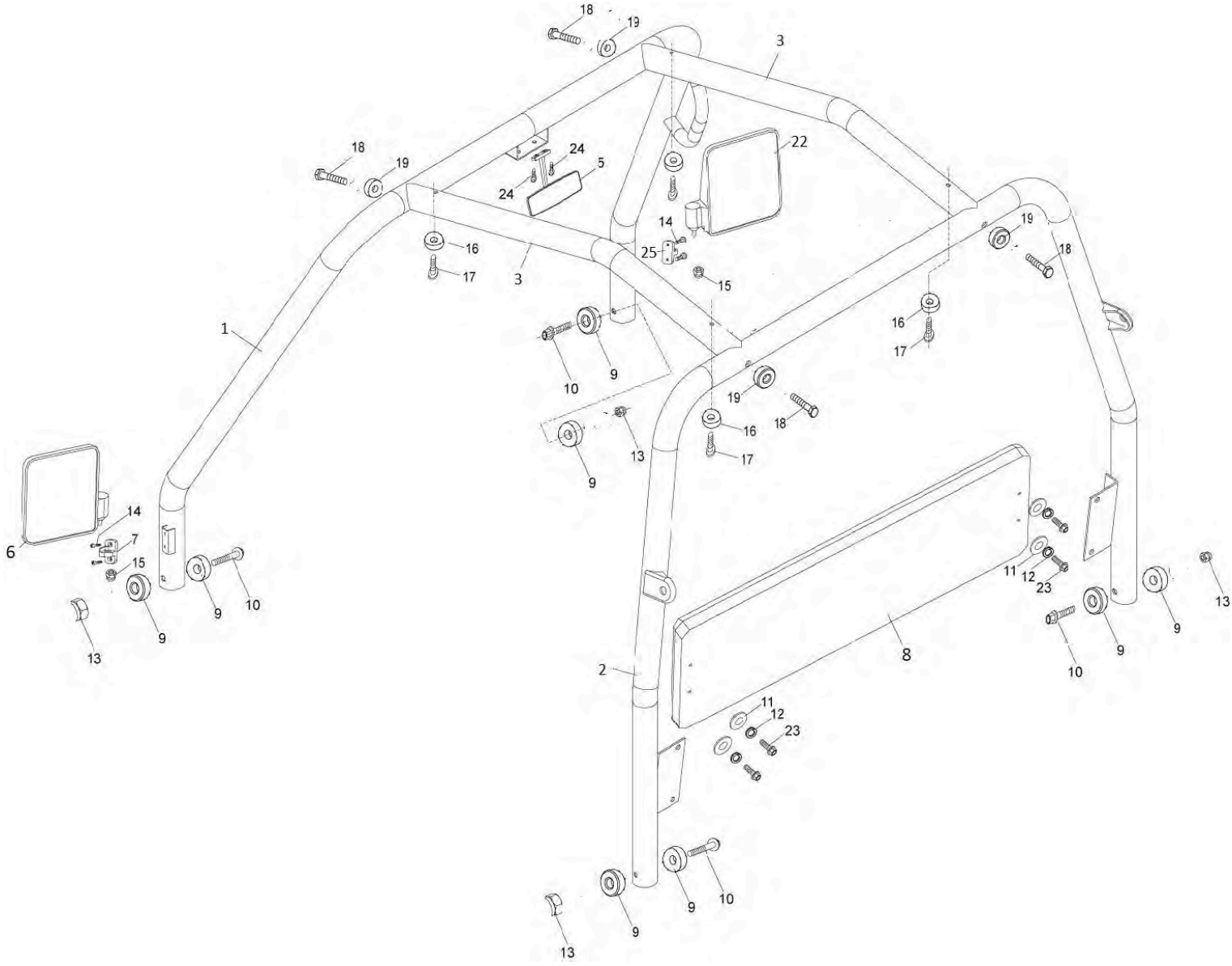

REF#	HH PART#	DESCRIPTION	PCS
F2-1	15-0101-00	FRONT BRUSH GUARD (LEFT TO RIGHT)	1
F2-2	15-0104-00	REAR BRUSH GUARD (LEFT TO RIGHT)	1
F2-3	15-0102-00	TOP BRUSH GUARD	2
F2-4			
F2-5	6.000.084-C	INNER MIRROR	1
F2-6	15-1801-00L	SIDE MIRROR, LEFT)	1
F2-7	15-1804-00L	FIXING BASE, LEFT SIDE MIRROR)	1
F2-8	15-0402-00	BACK, SEAT	1
F2-9	7.010.049	R-WASHER 8	10
F2-10	9.108.060	FLANGE BOLT, M8X1.25X60	4
F2-11	9.300.008	WASHER, Ø8	8
F2-12	9.400.008	SPRING WASHER, Ø8	10
F2-13	9.220.008	Lock Nut m8	4

REF#	HH PART#	DESCRIPTION	PCS
F2-14	9.106.020	Flange head Bolt, M6X20	4
F2-15	009-060000-00	ACORN NUT, M6	2
F2-16	007-7-00	WASHER, SPHERICAL Ø7	4
F2-17	9.600.655	SCREW CROSS, M6X55	4
F2-18	9.110.050	HEX BOLT, M10X1.25X50	4
F2-19	007-10P5-00	WASHER, SPHERICAL Ø10.5	4
F2-20			
F2-21	9.108.060	FLANGE BOLT, M8X1.25X60	2
F2-22	15-1801-00R	SIDE MIRROR, RIGHT	1
F2-23	9.108.030	FLANGE BOLT, M8X1.25X30	4
F2-24	003-050015-00	SCREW CROSS, M5X15	2
F2-25	15-1804-00R	FIXING BASE, RIGHT SIDE MIRROR	1

Main Frame

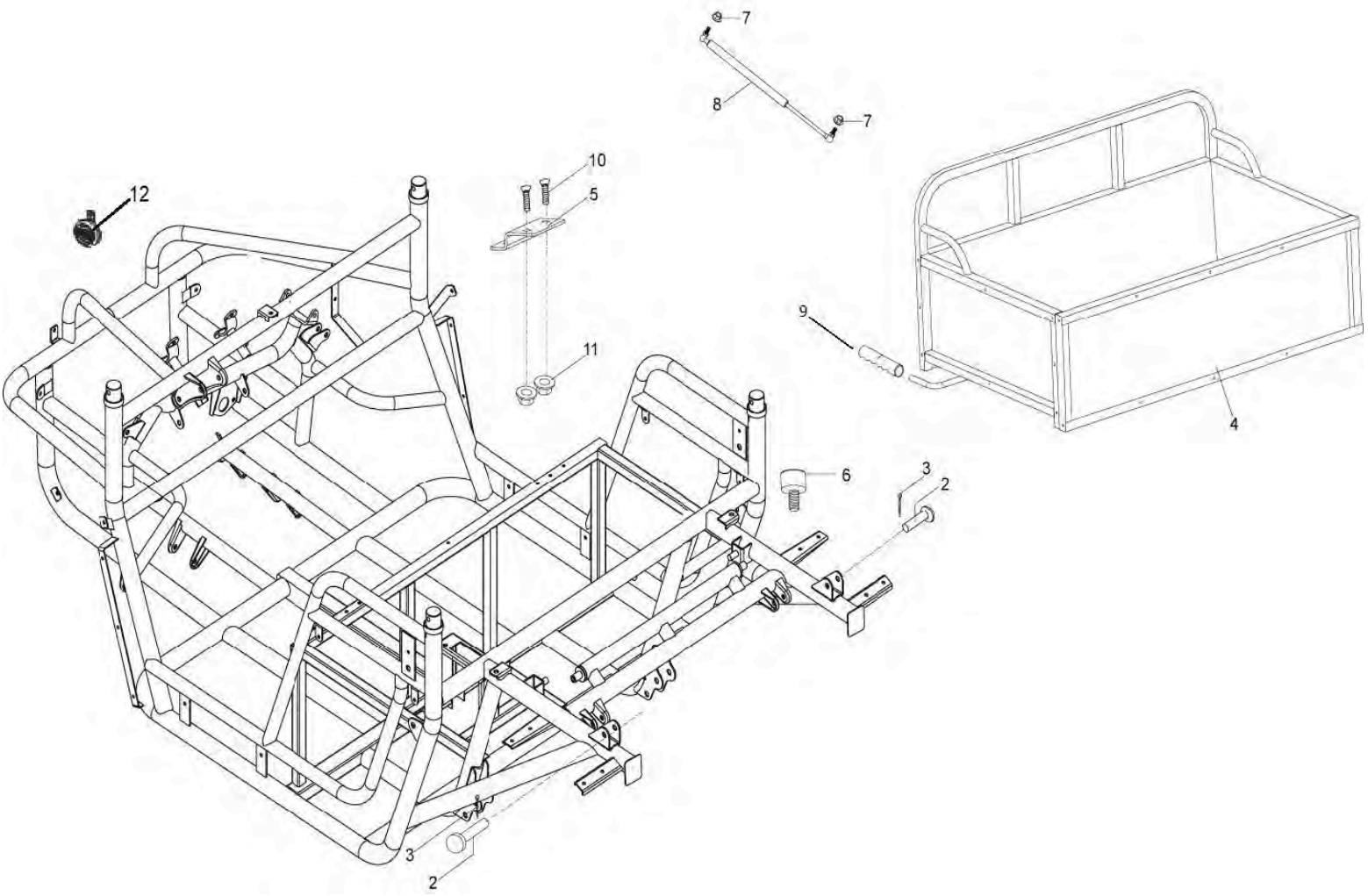

REF#	HH PART#	DESCRIPTION	PCS
F3-1			
F3-2	003-01250-00	SHAFT PIN, Ø12X50	2
F3-3	9.500.325	COTTER PIN	2
F3-4	18-0609-00	DUMP BED	1
F3-5	15-0408-00	SEAT HINGE SET	2
F3-6	15-0507-00	RUBBER STOP, DUMP BED	2
F3-7	9.220.008	SELF-LOCK NUT M8X1.25	4
F3-8	15-1803-00	DUMP BED SHOCK	1
F3-9	18-0501-00	RUBBER HAND GRIP	2

REF#	HH PART#	DESCRIPTION	PCS
F3-10			
F3-11			
F3-12	6.000.135	Horn	1
F3-13			
F3-14			
F3-15			
F3-16			
F3-17			

Steering System

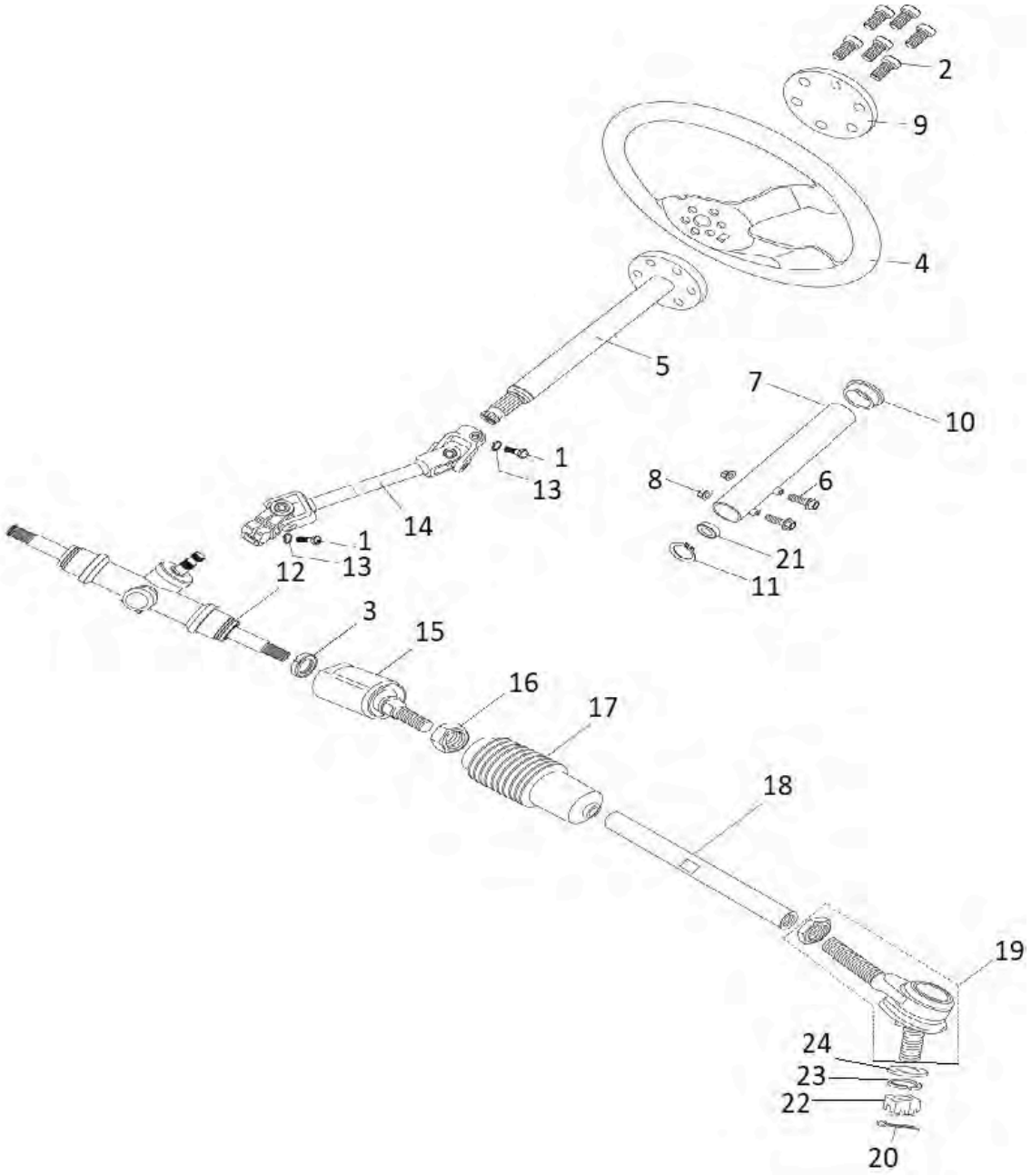

REF#	HH PART#	DESCRIPTION	PCS
1	9.108.030	BOLT, M8X30	2
2	9.600.615	PHILLIPS HEAD BOLT M6X15	6
3	9.900.016	ROUND NUT	2
4	15-1003-00	STEERING WHEEL	1
5	15-1004-00	STEERING COLUMN	1
6	9.110.075	FLANGE BOLT, M10X1.25X75	2
7	18-1005-00	STEERING POST	1
8	9.220.010	SELF-LOCK NUT, M10X1.25	2
9	15-0213-00	COVER, STEERING WHEEL	1
10	15-1011-00	STEERING AXLE CAP	1
11	016-190000-00	C-Clip Radius 19	1
12	4.000.008-250	RACK AND PINION ASSY.	1

REF#	HH PART#	DESCRIPTION	PCS
13	9.400.008	SPRING WASHER Ø8	2
14	18-1007-00	STEERING UNIVERSAL JOINT	1
15	4.000.008	TIE ROD END	2
16	9.220.012	NUT, M12X1.25	2
17	7.020.002	STEERING BALL JOINT COVER	2
18	8.010.157-GTS	TIE ROD 5.5"	2
19	6.000.062	BALL JOINT ASSY.	2
20	9.500.235	COTTER PIN 2.5X35	2
21	010-61904	BEARING 61904	1
22	9.800.010	CASTLE NUT M10	2
23	9.400.010	LOCK WASHER 10	2
24	9.300.010	FLAT WASHER 10	2

Front Suspension

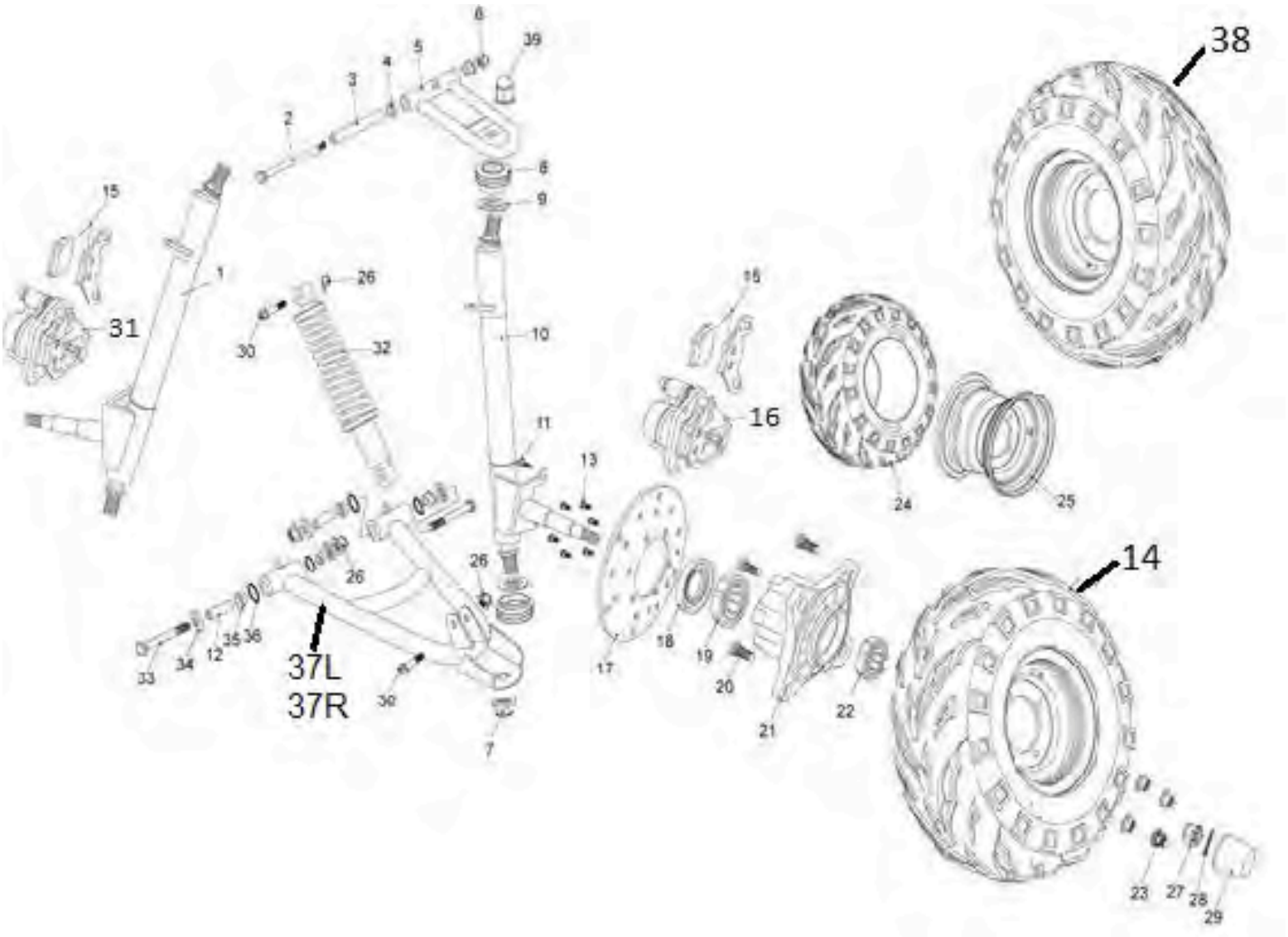

REF#	HH PART#	DESCRIPTION	PCS
1	2.000.028-R	STRUT/SPINDLE SUPPORT, RIGHT	1
2	9.108.105	FLANGE BOLT M8x1.25x105	2
3	8.010.015	UPPER SUSPENSION ARM COLLAR	2
4	7.010.003	UPPER SUSPENSION ARM BUSHING	4
5	4.000.004-BK	UPPER SUSPENSION ARM	2
6	9.220.008	LOCKING FLANGE NUT. M8	2
7	9.800.012	CASTLE NUT M12	4
8	7.020.025	BALL HEAD DUST SEAL	4
9	8.020.053	BALL HEAD SPACER	4
10	2.000.027-R	STRUT/SPINDLE SUPPORT, LEFT	1
11	9.908.014	BOLT STRAP M8x14	4
12	8.010.014	LOWER SUSPENSION ARM COLLAR	4
13	9.106.012	BOLT STRAP M6x12	12
14	18-0901-00	LF Tire/Wheel Assembly, black/cst	1
15	7.020.016	PAD SET. FR. BRAKE CALIPER	2
16	6.000.028	FRONT BRAKE CALIPER. L	1
17	8.010.054	FRONT DISC BRAKE	2
18	9.040.002	DUST SEAL 47x25-7	2
19	9.030.002	BEARING 6204-Z	2
20	9.710.031	TIRE BOLT M10x1.25x31	8

REF#	HH PART#	DESCRIPTION	PCS
21	8.010.085B	FRONT WHEEL HUB	2
22	9.030.010	BEARING 6202-Z	2
23	9.220.010	LOCKING FLANGE NUT M10	8
24	14813	CST FRONT TIRE 22x7-10	1
25	002-101006-00	10" Front Steel Wheel, black	2
26	9.220.010	LOCKING FLANGE NUT M10	16
27	9.800.012	CASTLE NUT M12	2
28	9.500.220	COTTER PIN Φ2x20	2
29	7.020.039	FR. HUB COVER.	2
30	9.110.040	FLANGE BOLT M10x1.25x40	4
31	6.000.095	FRONT BRAKE CALIPER. R	1
32	6.000.325	CUSHION ASSY. FR L=325	2
33	9.110.080	FLANGE BOLT M10x1.25x80	4
34	8.020.034	LOWER SUSPENSION ARM DUST CAP	8
35	7.010.002	LOWER SUSPENSION ARM BUSHING	8
36	9.040.001	O-RING Φ 21.2x2.65	8
37L	18-1504-00L	LEFT LOWER SUSPENSION ARM	1
37R	18-1504-00R	RIGHT LOWER SUSPENSION ARM	1
38	18-0903-00	RF Tire/Wheel Assembly, black/cst	1
39	8.010.140	ACORN NUT M12	2

Seat, Brake, Pedals

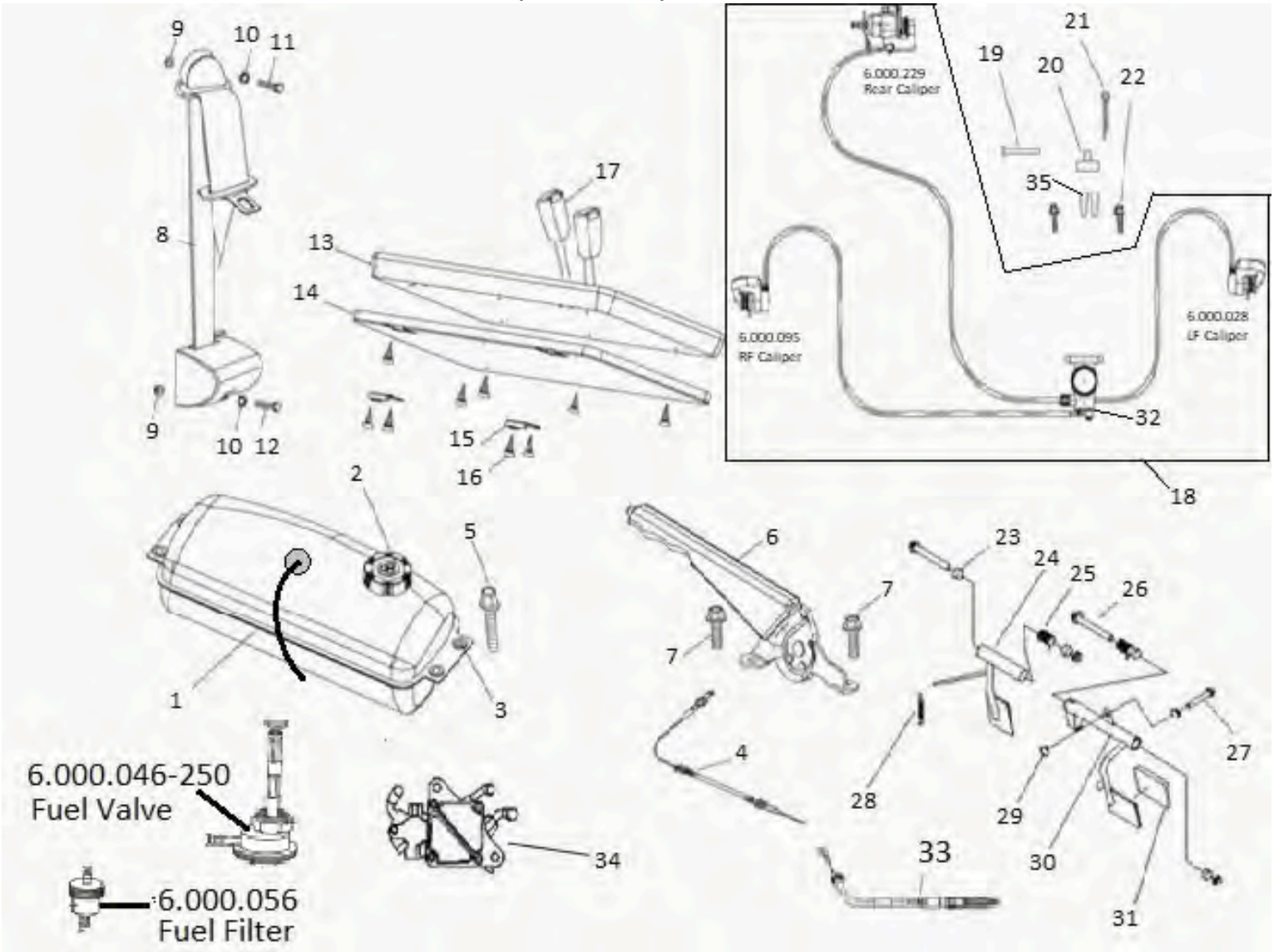

REF#	HH PART#	DESCRIPTION	PCS
1	18-0629-01	Fuel Tank w/evap canister	1
2	18-0232-01	Fuel Cap	1
3	7.020.005	Rubber Mount	4
4	18-0707-00	Parking Brake Cable	1
5	9.108.055	Bolt, M8 X 1.25 X 55	4
6	15-1412-00	Lever, Hand Brake	1
7	9.108.020	Flange Bolt	2
8	14786	Retractable Seat Belt	2
9	9.220.010	Nut, M10	4
10	9.400.010	Spring Washer	4
11	9.110.020	Bolt, M10X1.25X20	2
12	9.110.025	Bolt, M10X1.25X25	2
13	15-0401-00	Seat Cushion	1
14	15-0229-00	Seat Tub Cover	1
15	15-0408-00	Upper Hinge, Front Seat	2
16	014-480015-00	Counter Sunk Screw	12
17	15-0406-00	Seat Belt Buckle	2

REF#	HH PART#	DESCRIPTION	PCS
18	18-1400-00	Complete brake System	1
19	9.700.624	Pin 6X24	1
20	8.030.024	Spindle Bracket	1
21	9.500.430	Cotter Pin 4 x 30	1
22	9.108.035	Bolt Washer M8x1.25x35	2
23	14119	Bushing Sleeve 12 X 21 X 12	4
24	18-0610-00	Throttle Pedal	1
25	14113	Spring, Throttle Pedal	1
26	9.100.845	Bolt, M8 X 1.25 X 145 HHCS ZN	2
27	9.100.840	Bolt M8X1.25X40	1
28	14852	Spring, Throttle Pedal	1
29	14088	M8X1.25 Nut	4
30	18-1413-00	Brake Pedal	1
31	2-70261	Brake Pedal Rubber	2
32	6.000.076	Brake Master Cylinder	1
33	18-0704-00	Throttle Cable	1
34	18-0321-00	Fuel Pump	1
35	8.010.081	Spindle Pin	2

Electric Components

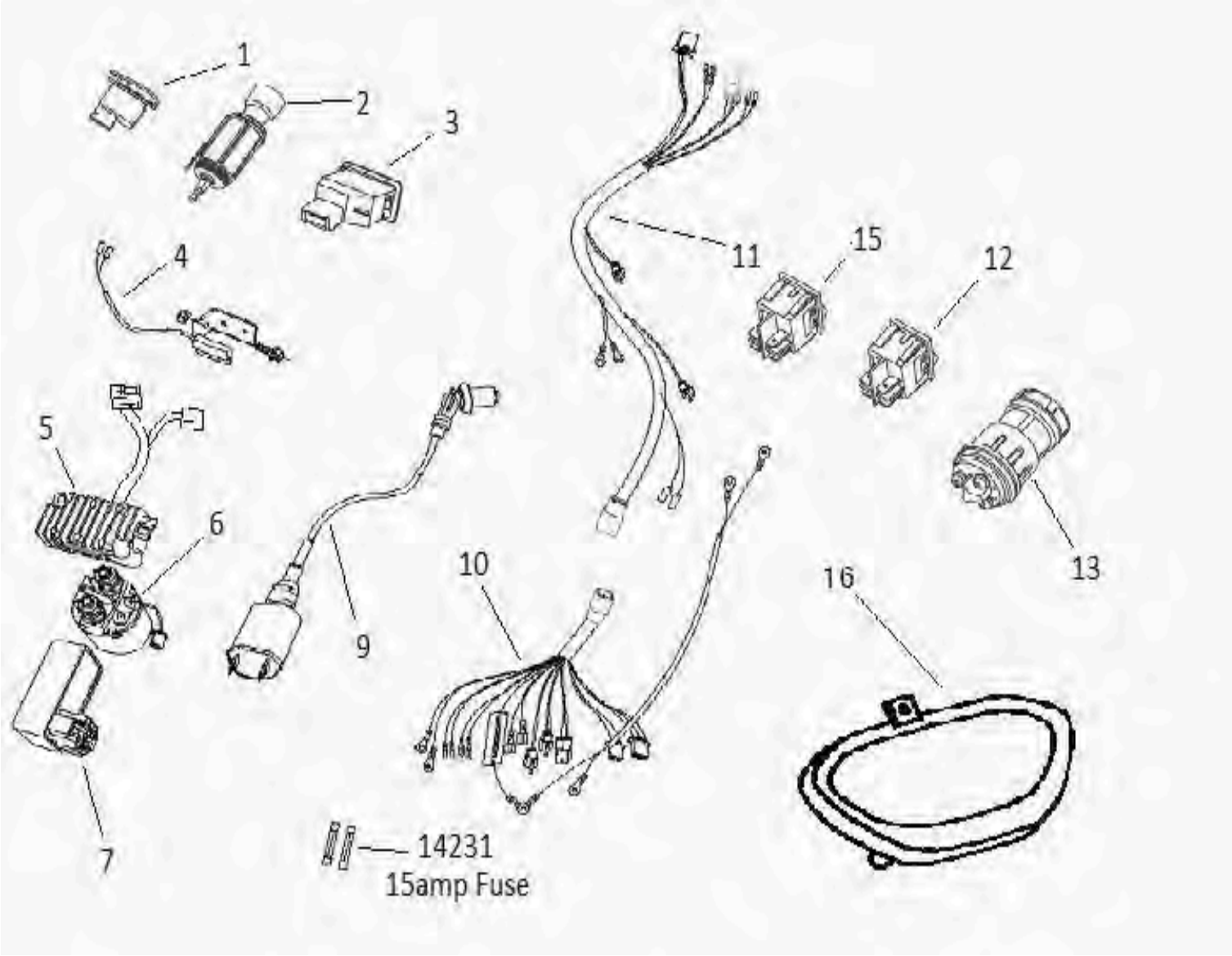

REF#	HH PART#	DESCRIPTION	PCS
1	6.000.079	Horn Switch	1
2	6.000.087	12Volt Outlet	1
3	6.000.113	Blinker Switch	1
4	12.026.023	Speedometer Sensor	1
5	6.000.124-HO	Regulate Rectifier Comp.	1
6	6.000.035	Starter Relay	1
7	13-0322-00	C.D.I. 7500 rpm limiter	1
9	6.000.126	Ignition Coil	1
10	18-0316-00	Swing Arm Wire Harness	1
11	18-0303-00	Main Wire Harness	1
12	6.000.160	Headlight Switch	1
13	6.000.158	Ignition key Switch	1
15	15-0309-00	Hazard Switch	1
16	18-0305-00	Speedometer	1

Lower Swing Arm

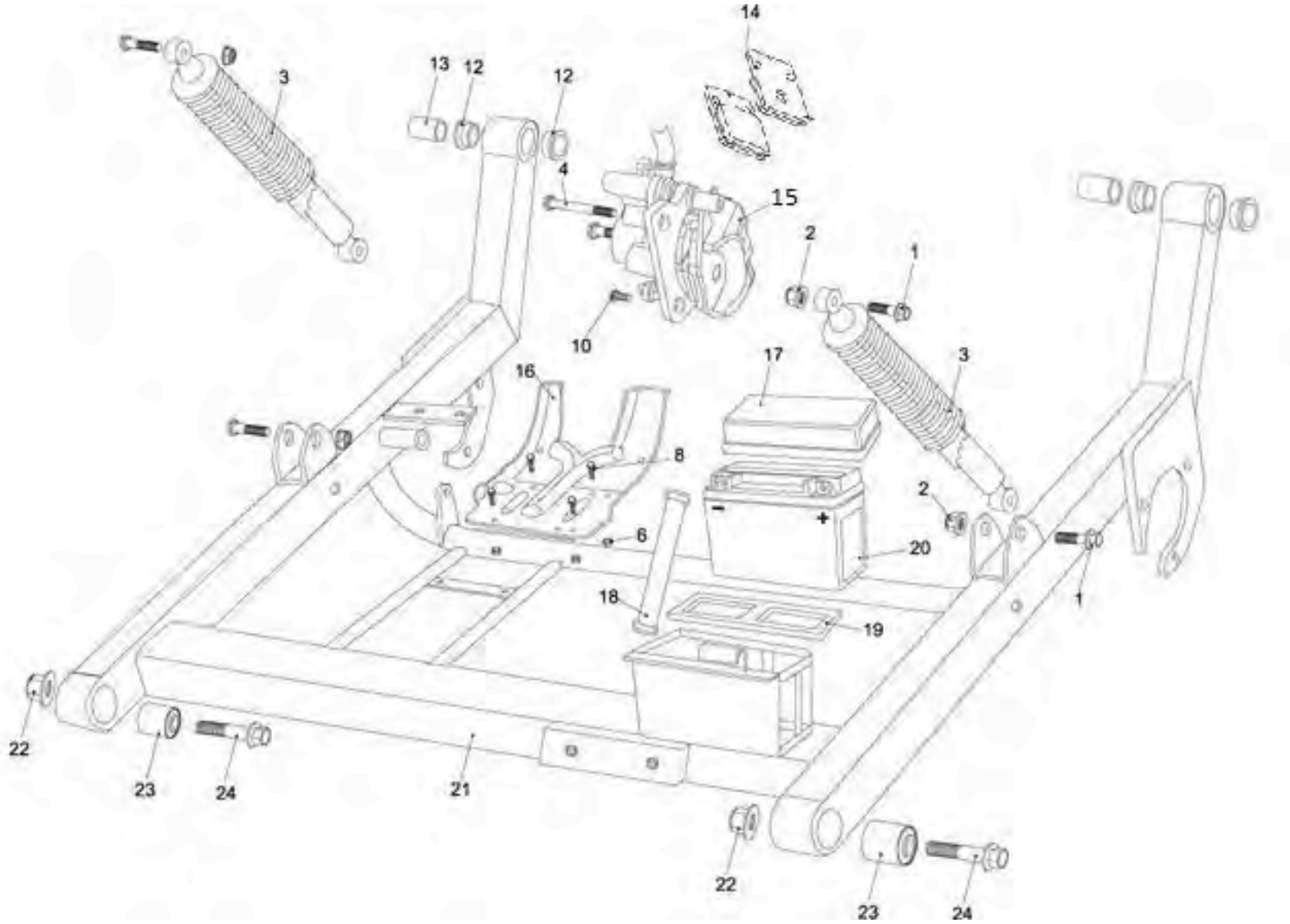

REF#	HH PART#	DESCRIPTION	PCS
1	9.110.040	FLANGE BOLT M10x1.25x40	4
2	9.220.010	LOCKING FLANGE NUT M10	4
3	6.000.006	CUSHION ASSY. RR	2
4	9.108.100	BOLT STRAP M8x1.25x100	1
6	9.220.006	LOCK NUT M6	4
8	9.106.016	BOLT M6X16	4
10	9.908.012	ALLEN BOLT M8x1.25x12	1
11			
12	7.010.006	SWING ARM BUSHING	4
13	8.010.028	SWING ARM COLLAR	2
14	7.020.022	RR. BRAKE PAD SET	1
15	6.000.229	CALIPER ASSY. RR	1
16	14185	LOWER CHAIN GUARD (14188 UPPER)	1
17	7.010.028	BATTERY COVER	1
18	7.020.023	BATTERY BAND	1
19	7.020.020	BATTERY LOWER CUSHION	1
20	6.000.055	BATTERY (GTX9-BX)	1
21	18-0626-00	RR. LOWER SWING ARM COMP.	1
22	9.220.012	LOCKING FLANGE NUT M12	2
23	7.020.008	SWING ARM CUSHION BUSHING	2
24	9.112.060	FLANGE BOLT M12x1.25x60	2

Upper Swing Arm

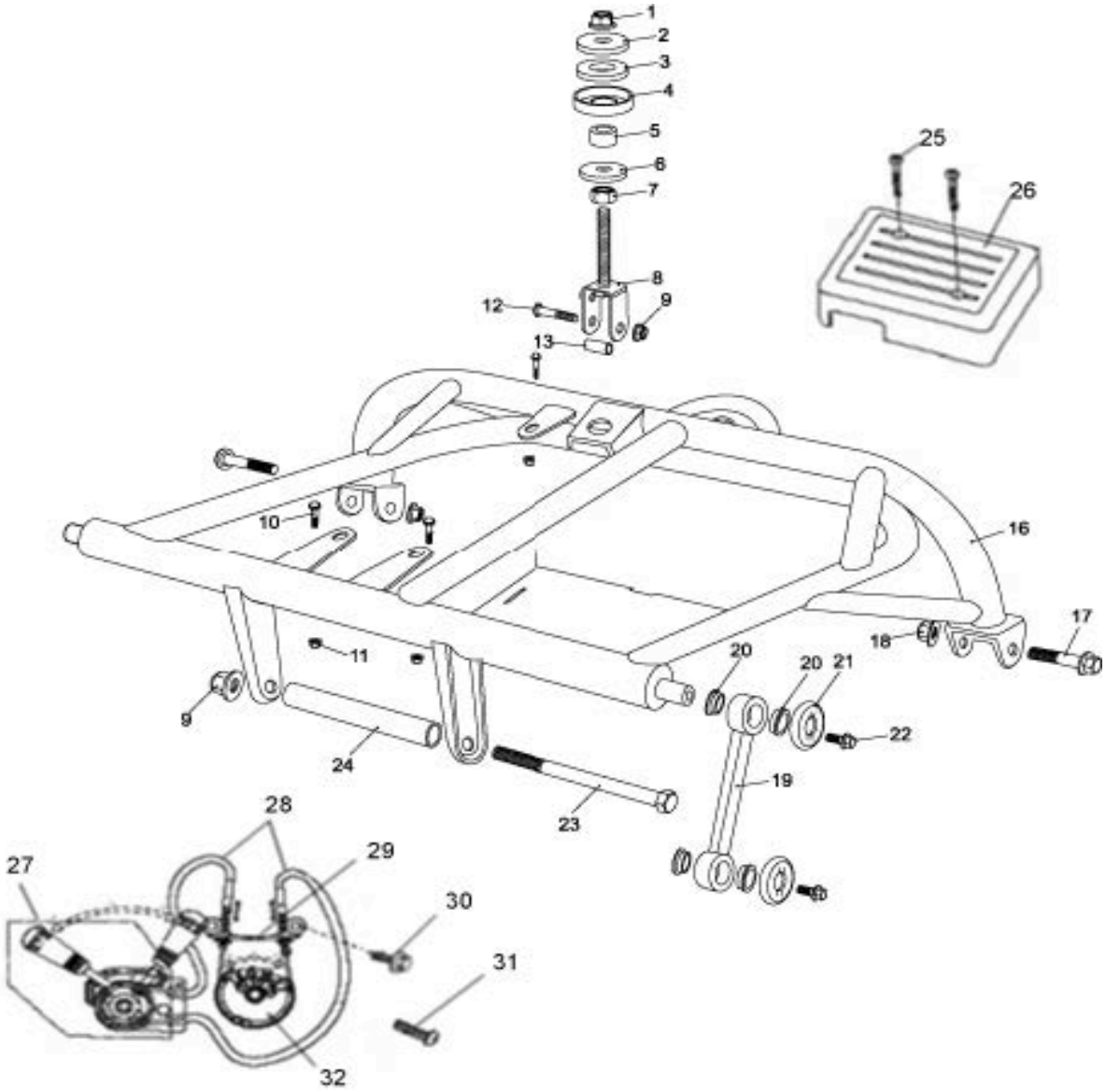

REF#	HH PART#	DESCRIPTION	PCS
1	9.220.012	LOCKING FLANGE NUT. M12	1
2	8.010.042	WASHER. ENGINE MOUNT LINK	1
3	7.020.001	CUSHION. ENGINE MOUNT LINK	1
4	8.020.045	SPACER. ENGINE MOUNT LINK	1
5	8.010.041	COLLAR. ENGINE MOUNT LINK	1
6	9.300.012	WASHER. FLAT Φ12	1
7	9.200.012	NUT M12	1
8	6.000.026	ENGINE MOUNT BOLT PLATE	1
9	9.220.010	LOCKING FLANGE NUT. M10	1
10	9.106.022	BOLT-WASHER M6x22	3
11	9.220.006	LOCKING NYLON NUT. M6	3
12	9.110.045	BOLT-WASHER M10x1.25x45	1
13	8.010.076	COLLAR. ENGINE MOUNT BOLT PLATE	1
14			
15			
16	2.000.062	REAR SWING ARM ASS'Y. UPPER	1

REF#	HH PART#	DESCRIPTION	PCS
17	9.112.060	BOLT-WASHER M12x1.25x60	2
18	9.220.012	LOCKING FLANGE NUT. M12	2
19	8.030.001	SWING ARM DOG BONE	2
20	7.010.008	BUSH. CON' ROD	8
21	8.020.013	SPACER. CON' ROD	4
22	9.108.016	BOLT-WASHER M8x1.25x16	4
23	9.110.195	BOLT-WASHER M10x1.25x195	1
24	8.010.025	COLLAR. ENGINE MOUNT	1
25	9.600.655	BOLT, M6 X 1.00 X 60 FHCS ZN	2
26	7.010.029	COVER, ELECTRICAL	1
27	14478-R	ASM, TRANS SHIFT LEVER - 150CC	1
28	18-0706-00	CABLE, D/N/R SHIFT - 150CC	2
29	14473	BRACKET, SHIFT CABLE - 150CC	1
30	9.106.014	BOLT, M6 X 1.00 X 14 FHCS ZN	2
31	9.106.020	BOLT, M6 X 1.00 X 20 FHCS ZN	1
32	14750	DISC, SHIFT CONTROL - 150CC	1

Rear Axle

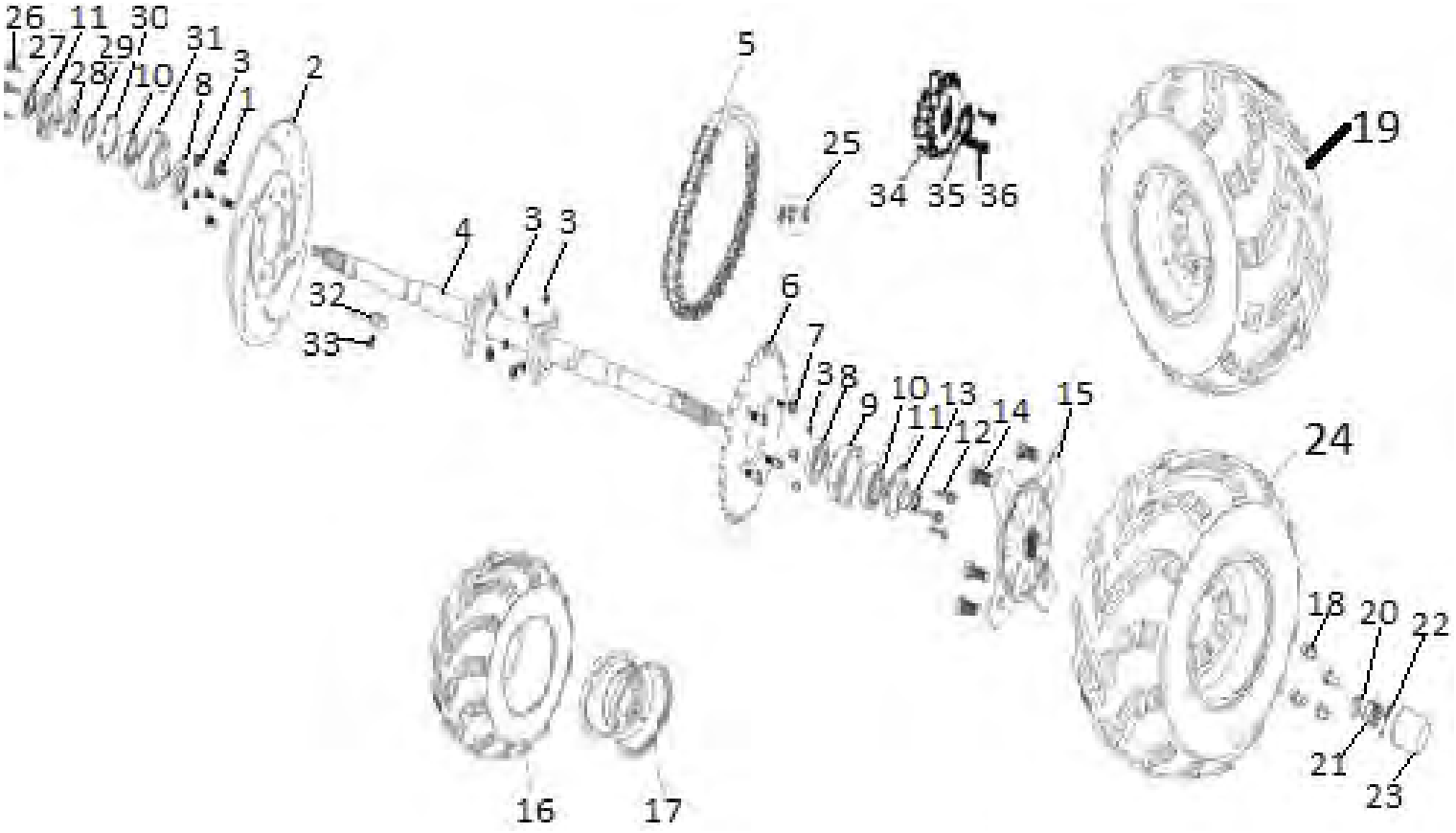

REF#	HH PART#	DESCRIPTION	PCS
1	9.108.022	BOLT-WASHER M8x1.25x22	4
2	8.010.053	DISC. RR. BRAKE	1
3	9.220.008	LOCK FLANGE NUT. M8	14
4	8.010.057B-N	REAR AXLE	1
5	9.070.002-D	CHAIN Double O-RING DRIVE.	1
6	008-41-530D	REAR SPROCKET (41T)	1
7	9.108.027	BOLT-WASHER M8x1.25x27	4
8	9.040.006	DUST SEAL 50X34-7	2
9	8.030.033	COMP. HOUSING RR. AXLE BRG	2
10	9.030.006	BEARING 6206	2
11	8.020.028	BEARING BASE	2
12	9.108.040	BOLT-WASHER M8x1.25x40	6
13	9.040.007	DUST SEAL 42X30-7	2
14	9.710.031	BOLT. TIRE M10x1.25x31	8
15	8.010.089B	HUB. REAR AXLE	2
16	14811	CST REAR TIRE 22x10-10	2
17	002-100100-03	REAR WHEEL 10" BLACK	2
18	9.220.010	LUG NUT M10	8

REF#	HH PART#	DESCRIPTION	PCS
19	18-0904-00	RR Tire/Wheel Assembly, black/cst	1
20	9.700.016	WASHER 16	2
21	9.800.016	CASTLE NUT. M16	2
22	9.500.430	COTTER PIN. 4X30	2
23	7.020.039	COVER. RR. HUB	2
24	18-0902-00	LR Tire/Wheel Assembly, black/CST	1
25		MASTER LINK. CHAIN	1
26	9.108.045	FLANGE BOLT M8X1.25X45	3
27	9.040.008	DUST SEAL 42X28-7	1
28	9.900.030	ROUND NUT M30X1.5	1
29	8.020.181	KEEPER	1
30	9.700.300	CIRCLIP Φ62	1
31	8.030.033	AXLE BRG HOUSING COMP.RI	1
32	12.025.024	MAGNETIC CONTACT	1
33	12.025.025	EYE BOLT, M3X6	1
34	008-11-530D	SPROCKET, DBL ROW 50P 11	1
35	8.020.181	KEEPER, SPROCKET	1
36	9.106.012	BOLT, M6 X 1.00 X 12 FHCS ZN	2

Engine, Air Filter System

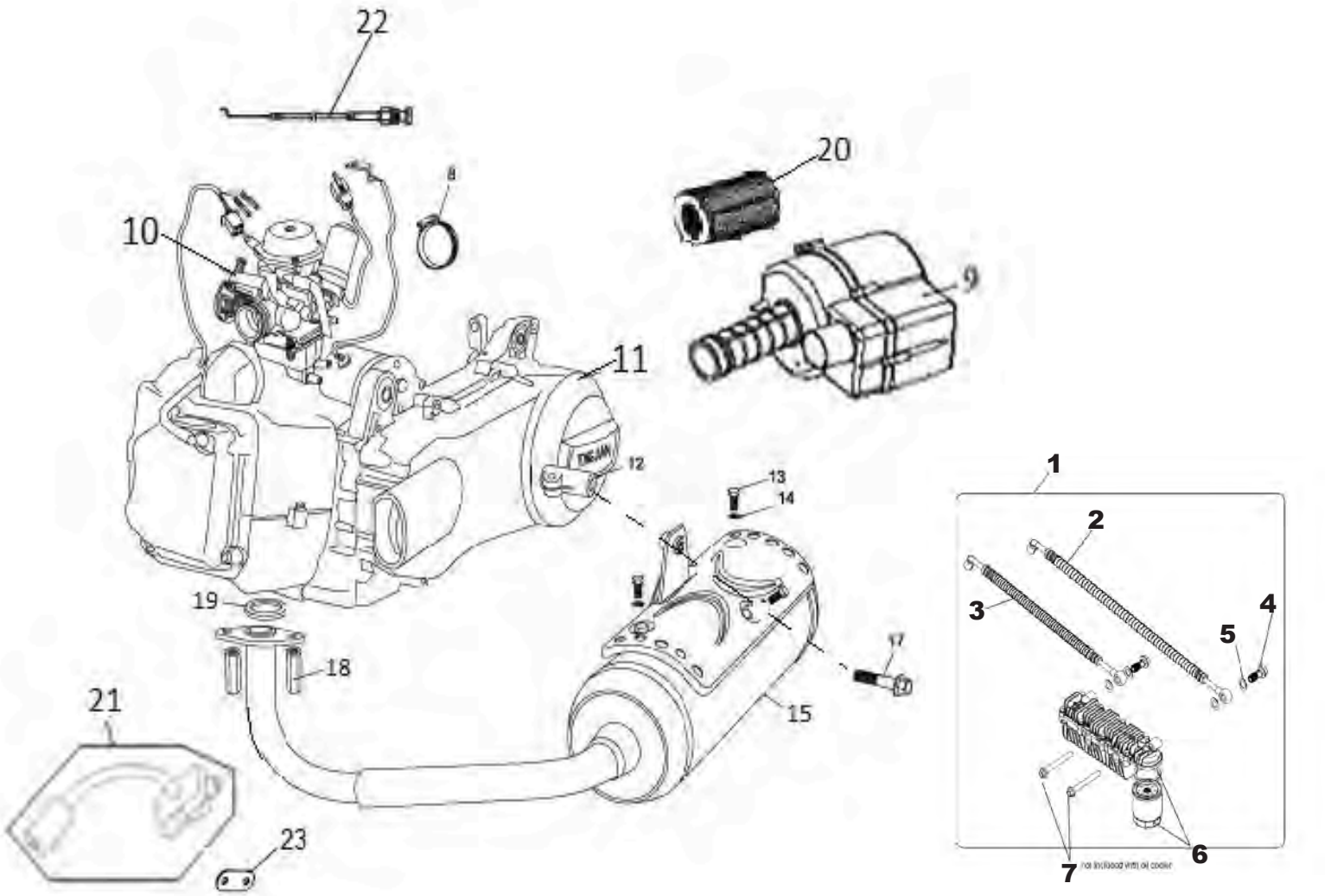

REF#	HH PART#	DESCRIPTION	PCS
1	4.000.028	OIL COOLER ASSEMBLY	1
2	6.000.216	LONG OIL HOSE	1
3	6.000.217	SHORT OIL HOSE	1
4	8.010.149	BANJO BOLT	4
5	8.020.178	CRUSH WASHER	8
6	6.000.218	OIL FILTER	1
7	9.108.075	FLANGE BOLT M8X75 (not included in #1)	2
8	8.020.056	AIR CLEANER CLAMP	1
9	13-1602-01	Air Box Assembly w/evap port	1
10	13-1601-00	Carburetor w/manual choke housing	1
11	006-HO150-01	ENGINE, 150CC	1
12	14507	MUFFLER RACK SUPPORT	1
13	9.106.012	BOLT, M6X12	3
14	9.400.006	LOCKING WASHER Φ6	3
15	6.000.074	MUFFLER COMP. EX	1

REF#	HH PART#	DESCRIPTION	PCS
16	8.020.055	BOOT CLAMP	1
17	9.108.040	BOLT M8X40	1
18	9.040.027	MUFFLER JOINT NUT, M6	2
19	M150-3050354	EX. PIPE GASKET	1
20	6.000.151	AIR CLEANER ELEMENT	1
21	14762	AIR INJECTION ASM, MUFFLER	1
22	13-0705-00	Choke Cable	1
23	13-1605-01	Gasket, Air Injection Asm	1
24			
25			
26			
27			
28			
29			